Assessment of Malathion and Malaoxon Concentration and Persistence in Water, Sand, Soil and Plant Matrices Under Controlled Exposure Conditions

By

Rosemary H. Neal[1], Patrick M. McCool[2], and Theodore Younglove[2]

[1]Department of Pesticide Regulation, Environmental Hazards Assessment Program,
SAPRC - Trailer 14, University of California, Riverside, CA 92521-0312
[2]Statewide Air Pollution Research Center-006,
University of California, Riverside, CA 92521-0312

February 1993

ENVIRONMENTAL HAZARDS ASSESSMENT PROGRAM

STATE OF CALIFORNIA
Environmental Protection Agency
Department of Pesticide Regulation
Environmental Monitoring and Pest Management Branch
1220 N Street, Sacramento, California 95814

EH 93-03

Assessment of Malathion and Malaoxon Concentration and Persistence in Water, Sand, Soil and Plant Matrices Under Controlled Exposure Conditions

by

Rosemary H. Neal[1], Patrick M. McCool[2], and Theodore Younglove[2]

[1]Department of Pesticide Regulation, Environmental Hazards Assessment Program,
SAPRC - Trailer 14, University of California, Riverside, CA 92521-0312
[2]Statewide Air Pollution Research Center-006,
University of California, Riverside, CA 92521-0312

February 1993

Environmental Hazards Assessment Program

Abstract

Aerial application of baited malathion has been used in recent Mediterranean Fruit Fly Eradication Programs in California in 1981 and 1989/90. In response to public concerns about exposure to malathion from this method of application, the California Department of Health Services (CDHS) conducted exposure assessment studies and concluded that a potential subpopulation of sensitive individuals may exist. Additional information was required on the persistence of malathion in the environment and whether this persistence is affected by the presence of the protein bait. In order to gather additional information, a simulated spray application on five matrices was undertaken. The matices included: soil, sand, water, tomato fruit and lettuce leaves.

Methodology was developed to apply bait/malathion mixtures under controlled conditions. These methods required a modification of the normal mixing ratio of bait/malathion to achieve proper mass deposition per unit area. The application ratio in the 1989/90 aerial spray was 4:1 bait/malathion (v/v). The controlled spray application reported here was approximately 10,000:1 bait/malathion (v/v). The influence of the ratio of bait to malathion on degradation rates is not known; further research is needed to address this issue.

All experimental applications were carried out in the evening to mimic conditions of the 1989/90 aerial application. The sprays were conducted at the University of California, Riverside. Eleven applications were required to expose all replicates of the exposure matrices. In each spray, a portion of all five matrices were represented to minimize spray variability. Sampling periods were as follows: 0 hr (immediate post spray), 12 hr, 24 hr, 48 hr, 96 hr, 240 hr and 504 hr. At each sampling time, four replicates of each matrix were sampled, one from each of the four chambers. Samples were collected, stored on dry ice and subsequently shipped to APPL laboratories for analysis of malathion and malaoxon.

Although there was variability between sprays, differences in variance were not significant nor were there significant differences in mean values between sprays. Aspects of the quality control analyses demonstrated highly variable results. Of the 18 blind spikes submitted, 11 samples varied from theoretical spiked concentrations by greater than 20%.

Degradation of malathion in sand was very rapid, with only 16% of the original 0 hr concentration predicted remaining at 12 hr after application. Malaoxon concentrations were not detected in the sand matrix until approximately 239 hr . In contrast, degradation on soil was much slower than sand. At 12 hr, approximately 39% malathion was predicted to remain. The slower rate of decay may be attributed to the soil organic fraction which could bind malathion. Appearance of malaoxon was not evident in soil until 96 hr.

No consistent trends were evident in following the degradation of malathion in the water matrix. Because of these inconsistencies, no statistical models of the data were fit. Malaoxon did not appear in the water matrix until 504 hr.

Degradation of malathion on the surface of tomato fruit was extremely slow compared to the sand and soil matrices. At 12 hr, approximately 90% of the malathion measured at 0 hr was predicted to remain and 50% predicted at 4 days. Internal concentrations of malathion in tomato fruit decayed more rapidly, predicting 72% remaining at 12 hr. The interaction with cellular components may be responsible for the increase in decay rate. Malaoxon was not detected until 96 hrs in tomato fruit.

The decay of malathion on lettuce leaves was extremely rapid compared to tomato fruit. Predicted malathion levels were 27% at 12 hr. This more rapid decline may be due to ion exchange processes at the leaf surface which may be minimal on tomato fruit. Internal malathion concentrations on lettuce leaves were only 13% after 12 hr, declining to about 2% after 21 days. Malaoxon was not detected at any time on lettuce leaves.

Acknowledgements

The authors wish to thank Mark D. Estock and Erika S. Brown for their considerable assistance with this project; Cindy Garretson for her valuable expertise as the Laboratory Liason Officer; C. Lynn Morrison for providing the plants; and Bob Teso for input regarding study design.

Disclaimer

The mention of commercial products, their source or use in connection with material reported herein is not to be construed as either an actual or implied endorsment of such product.

TABLE OF CONTENTS

Page

Abstract i
Acknowledgements iii
Disclaimer iii
Table of Contents iv
List of Figures vi
List of Tables viii

Introduction 1
- Background 1
- Project Objectives 5

Materials and Methods 6
- Spray Nozzle Calibration 6
- Malathion/Bait Formulations 7
- Controlled Exposure Methodology 9
- Matrices 11
- Sampling Methodology 14
- Sample Integrity 18
- Quality Control 18

Results and Discussion 19
- Spray Variability 19
- Quality Control Analysis 20
- Statistical Treatment of Residue Data 24
- Degradation of Malathion on Sand 27
- Degradation of Malathion on Soil 27
- Degradation of Malathion on Water 35
- Degradation of Malathion on Tomato 41
- Degradation of Malathion on Lettuce 49

Conclusions..... 56
References..... 60
Appendices..... 63
Appendix A - Analytical Methods
Appendix B - Field Samples: Raw Data
Appendix C - Quality Control: Raw Data
Appendix D - Statistical Methods

LIST OF FIGURES

Page

Figure 1. Spray deposition pattern from UniJet TG SS-1 nozzle (Spray Systems Inc.) for a 30s spray on a sampling grid of 36 points 8

Figure 2. Spray nozzle assembly and environment 10

Figure 3. Detailed drawing of field fumigation chamber (adapted from Musselman et al., 1986) 15

Figure 4. Double exponential decay of malathion residue concentrations on sand over a 21-day period. Y=583.300*EXP(-0.008*X) + 2685.645*EXP(-8.252*X), R^2 = 0.9999. Data points are mean values of four replicate samples 29

Figure 5. Malaoxon concentrations on sand over a 21-day period. Data points are mean values of four replicate samples 32

Figure 6. Double exponential decay of malathion residue concentrations on soil over a 21-day period. Y=862.377*EXP(-0.140*X) + 273.335*EXP(-0.001*X), R^2 = 0.8962. Data points are mean values of four replicate samples 33

Figure 7. Malaoxon concentrations on soil over a 21-day period. Data points are mean values of four replicate samples 37

Figure 8. Double exponential decay of dislodgeable malathion residue concentrations on tomato fruit over a 21-day period. Y=0.020*EXP(-0.038*X) + 0.150*EXP(-0.006*X), R^2 = 0.9981. Data points are mean values of four replicate samples 44

Figure 9. Double exponential decay of malathion residue concentrations in tomato fruit over a 21-day period. Y=11.475*EXP (-0.003*X) + 67.088*EXP(-0.033*X), R^2 = 0.9999. Data points are mean values of four replicate samples 47

Figure 10. Malaoxon concentrations in tomato fruit over a 21-day period. Data points are mean values of four replicate samples 48

Figure 11. Double exponential decay of dislodgeable malathion residue concentrations on lettuce leaves over a 10-day period.
Unadjusted: Y=0.138*EXP(-0.007*X) + 0.803*EXP(-0.150*X), $R^2 = 0.9982$.
Adjusted: Y=0.156*EXP(-0.002*X) + 0.821*EXP(-0.157*X), $R^2 = 0.9853$.
Data points are mean values of four replicate samples..... 51

Figure 12. Exponential decay of malathion residue concentrations in lettuce leaves over a 10-day period.Y=848.595*EXP(-0.050*X), $R^2 = 0.9873$.
Data points are mean values of four replicate samples..... 53

LIST OF TABLES

Page

Table 1. Characteristics of Clean Crop Malathion ULV..... 2

Table 2. Characteristics of Nu-Lure Protein Bait..... 3

Table 3. Physical/Chemical characteristics of the sand, soil, and water experimental matrices..... 12

Table 4. One-way analysis of variance tests for mean differences in malathion concentration and μg malathion/g bait between sprays..... 21

Table 5. Blind spike recoveries..... 22

Table 6. Malathion and Malaoxon Recovery from Matrix Duplicant Blanks. Analytes Do Not Include Nu-Lure® Proteinaceous Bait..... 23

Table 7. Regression model parameters..... 26

Table 8. Concentration of malathion residues in sand samples over a 21-day period..... 28

Table 9. Predicted concentrations of malathion residues in sand samples over a 20-day period..... 30

Table 10. Concentration of malaoxon in sand samples over a 21-day period..... 31

Table 11. Predicted concentrations of malathion residues in soil samples over a 20-day period..... 34

Table 12. Concentration of malathion residues in soil samples over a 21-day period..... 36

Table 13. Concentration of malaoxon in soil samples over a 21-day period..... 38

Table 14. Concentration of malathion residues in water samples over a 21-day period..... 39

Table 15. Concentration of malaoxon in water samples over a 21-day period..... 40

Table 16. Concentration of dislodgeable malathion residues on tomato fruit samples over a 21-day period..... 42

Table 17. Predicted concentrations of dislodgeable malathion residues on tomato fruit samples over a 20-day period..... 43

Table 18. Concentration of malathion residues in tomato fruit samples over a 21-day period..... 45

Table 19. Predicted concentrations of malathion residues in tomato fruit samples over a 20-day period..... 46
Table 20. Concentration of dislodgeable malathion residues on lettuce leaf samples over a 10-day period..... 50
Table 21. Predicted concentrations of dislodgeable malathion residues on lettuce leaf samples over a 20-day period..... 52
Table 22. Concentration of malathion residues in lettuce leaf samples over a 10-day period..... 54
Table 23. Predicted concentrations of malathion residues in lettuce leaf samples over a 9-day period..... 55
Table 24. Predicted Half-life of Malathion Concentration on Various Media.. 57

Introduction

Background

Malathion baited with Nu-Lure® has been used in recent Mediterranean Fruit Fly (Medfly) Eradication Programs in California USA, by the California Department of Food and Agriculture (CDFA, 1981, 1991). Malathion, a nonsystemic orthophosphate insecticide, has a relatively low acute mammalian toxicity and brief to moderate environmental persistence (Table 1). In its commercial form it is a clear, slightly amber liquid (approximately 90 - 95 % pure depending on formulation), with an aqueous solubility of 145 $\mu g\ ml^{-1}$ and a vapor pressure of 4×10^{-5} torr. Malathion is miscible in most common organic solvents. The insecticidal bait (Nu-Lure®) used in the 1990 CDFA Medfly Eradication Program has been described as a dark brown, slightly viscous, proteinaceous liquid derived from plant sources (Miller Chemical and Fertilizer Corp., 1990, Table 2). The low pH (3.5 - 4.5) is attributed to the presence of residual mineral acid used in the acid hydrolysis manufacturing process, and together with the high salt concentration, may play an important role in affecting the stability of malathion in the formulated bait mixture and in the environment.

In 1989-90, malathion was aerially applied to approximately 1504 square kilometers (581 square miles) of primarily urban area in Los Angeles, Orange, Riverside, and San Bernardino Counties of California over an 11-month period (August 1989 - July 1990). During this time 231,629 kg of malathion active ingredient were applied to 22 spray areas, with individual areas receiving between 1 and 12 applications. In the case of aerial treatment, the malathion ULV product and the Nu-Lure® bait were combined and the mixture applied by helicopters at a rate of 906 ml ha^{-1} in the 1989-1990 eradication program (CDFA, 1991), and 877 ml ha^{-1} in the 1991 eradication program. This equates to an application rate for the active ingredient of approximately 21500 $\mu g\ m^{-2}$. The malathion/bait mixture was applied at an altitude of 150 m at an airspeed of 70 knots (130

Table 1. Characteristics[a] of Clean Crop Malathion ULV[b].

Chemical Name:	S-1, 2-bis (ethoxycarbonyl)ethyl O,O-dimethyl phosphorodithioate
Molecular Formula:	$C_{10}H_{19}O_6PS_2$
Molecular Weight:	330.36
Melting Point:	2.85°C
Boiling Point:	156 - 157°C at 0.7 torr
Vapor Pressure:	4×10^{-5} torr at 30°C (5.3mPa)
Density:	1.23 g cm^{-3} at 25°C
Water Solubility:	145mg l^{-1}at 25°C
$\log_{10} K_{ow}$:	2.89

[a] taken from the Pesticide Manual 5th edition, British Crop Protection Council (1977), Chiou et al. (1977) and Hartley (1987)

[b]Technical formulation contains 95% active ingredient by weight.

Table 2. Characteristics[a] of Nu-Lure Protein Bait.

Total Solids % Dry Weight:	44.0 - 55.0
Protein %:	18.0 - 25.0
Salt % (NaCl):	6.0 - 16.0
Salt % (NH_4Cl):	1.0 - 7.0
Carbohydrate %:	6.0 - 14.0
Reducing Sugars %:	1.0 - 3.0
Fat %:	1.0 - 3.0
pH:	3.5 - 4.5
Density g cm^{-3}:	1.22 - 1.28

[a] Miller Chemical and Fertilizer Corp. (1990)

km h^{-1}) and discharged through six Tee Jet 8010 flat fan nozzles (Spraying Systems, Inc., Wheaton, IL) operating at 22 psi (pounds per square inch) positioned along a 14.63 m boom. This resulted in a nominal swath width of 61 m. The spray operations generally occurred at night, beginning at 21:00 PST and ending between 1:00 and 4:00 PST the following morning, depending on the size of the area treated.

There is a lack of direct monitoring data for malathion and related compounds on surfaces and media which people contact directly, and for the persistence of malathion and related compounds in the malathion/bait mixture. A recent malathion risk assessment published by CDHS presents a thorough review of current information pertaining to the persistence of malathion in the environment (CDHS, 1991). Hydrolysis rates of malathion under aqueous conditions range from 20 h in normal river water at pH 7 to as much as 4 years in distilled water at pH 4.0 (Wolfe et al., 1977). Malathion shows moderate stability in natural fresh and saline waters between pH 5 and 7, but is less stable at pH >7. Since the pH of the Nu-Lure® bait is between 3.5 and 4.5, one might postulate that the hydrolytic half-life of the malathion under these conditions would be greater than if no bait were present. In addition, Lin, et al. (1983) have reported that increasing salt concentration decreases the half-life.

The persistence of malathion in the environment may also be affected by exposure to sunlight and ultraviolet light. Photolysis reduces the toxicity of malathion (Tsipriyan and Martsenyuk, 1984), but results in the generation of the more toxic trimethylphosphorothioate esters (Chukwudebe et al., 1989). Matrix contributions or interferences to this process are generally unknown, although Wolfe et al. (1977) reported the photolysis half-life for malathion in distilled water at wavelengths greater than 290 nm to be approximately 1000 h.

In addition to the concern surrounding the persistence of malathion in the environment, the presence and degradation of the breakdown products may also be important to human health considerations. Malaoxon, the product of a chemical oxidation of malathion, was monitored by CDFA during the 1990 Medfly Eradication Program. The data suggest that the air oxidation reaction is very rapid and that after two days, ambient concentration of malaoxon exceeds that of malathion (CDFA 1991). Air monitoring data from that study also showed that air concentrations of malathion increased for two days following an aerial application which was attributed to the volatilization from the deposited bait droplets.

Project Objectives

The behavior of malathion and its breakdown products in the environment may be affected significantly by the presence of the Nu-Lure® bait, and as a result affect the health risk to people exposed during an aerial application. Little data has been collected on the persistence of malathion or malaoxon in bait or on matrices commonly associated with urban settings. The objectives of this study were to simulate an aerial application of baited malathion in order to determine the concentration and persistence of malathion and malaoxon under controlled exposure and assay conditions for the following representative urban matrices: water (small container, e.g., wading pool), sand, soil and plant (tomato and lettuce).

Materials and Methods

Spray Nozzle Calibration

In order to simulate the 1989-1990 aerial application method, it was necessary to approximate mean diameter particle size and total malathion mass deposition per unit area. Based on the performance characteristics of the 8010 TeeJet nozzles used in aerial sprays (Spraying Systems, Inc.), nozzles with similar particle distributions were chosen for performance testing in a controlled application environment. In order to maximize the reproducibility of sprays a fixed, rather than moving, nozzle arrangement was chosen. The 8010 TeeJet nozzle was a 'flat fan' spray pattern which limited the area exposed under stationary conditions, and it would have covered an insufficient area to include all matrices or replicates. In order to maximize coverage a UniJet TG SS-1 (Spraying Systems, Inc.) nozzle was chosen, which yielded a solid cone pattern. Particle size and deposition at 75 psi with the TG SS-1 were similar to that obtained with the TeeJet 8010 nozzle at 22 psi.

The spray nozzle was connected through stainless steel (SS 316) Swagelock® fittings and 0.098 cm (0.25 inch) Teflon TFE® tubing to a stainless steel pressure cylinder which contained the spray liquid. The cylinder was pressurized by nitrogen gas to 75 psi and sprays were controlled with an electronically-operated solenoid valve placed between the cylinder and the nozzle. Initial testing demonstrated a maximum circular spray pattern area coverage of 0.762 m (2.5 feet) diameter at nozzle heights of 1 meter.

In order to determine spray pattern uniformity, a 6 x 6 grid of 10 cm plastic petri plates was arranged over the 0.762 m diameter spray area. Each plate was pre-weighed and numbered. Spray uniformity was assessed by weighing the water deposited in each plate during replicated 30 second sprays. Results indicated highest deposition in the center of

the spray pattern, directly under the nozzle, with decreasing deposition towards the edges of the spray area (Figure 1). Although spray uniformity varied within the sampling grid, it was determined that reasonably similar deposition rates could be obtained by avoiding the center of the sampling grid. Three UniJet TG SS-1 nozzles were tested and the most uniform of them was used for all subsequent spray calibrations and simulated aerial applications.

Malathion/Bait Formulations

Further spray calibration tests were conducted, first using Nu-Lure® bait mixture alone, then the 4:1 (v/v) bait/malathion formulations as used in the aerial spray applications in 1989-1990. Several problems became evident. Although atomization of bait alone could be accomplished with this nozzle, the addition of malathion (4:1 v/v ratio Nu-Lure®/Malathion ULV) increased the viscosity beyond the ability of the nozzle to properly atomize. Repeated testing indicated that atomization could be accomplished with dilution of the bait/malathion mixture with 15% water by volume. Mean particle size was not tested at this 15% dilution as it was for bait and water alone, and therefore it is not known if particle size/spray pressure relationships remained within the performance specifications supplied by the nozzle manufacturer.

Additional problems were encountered in achieving the correct total mass deposition per unit area using the 4:1 Nu-Lure®:malation mixing ratio. The target mass deposition of malathion was approximately 1980 $\mu g/ft^2$ based on mean values from previous aerial eradication spray programs (CDFA, 1991). Based on the fluid delivery and deposition rates within the fixed nozzle system, it was calculated that a spray of duration less than 0.25 seconds would be necessary to achieve total deposition of 1980 $\mu g/ft^2$. It was concluded that, even if physically possible to achieve a spray of such short duration, the reproducibility of the sprays would be minimal. As an alternative, the mixing ratio of

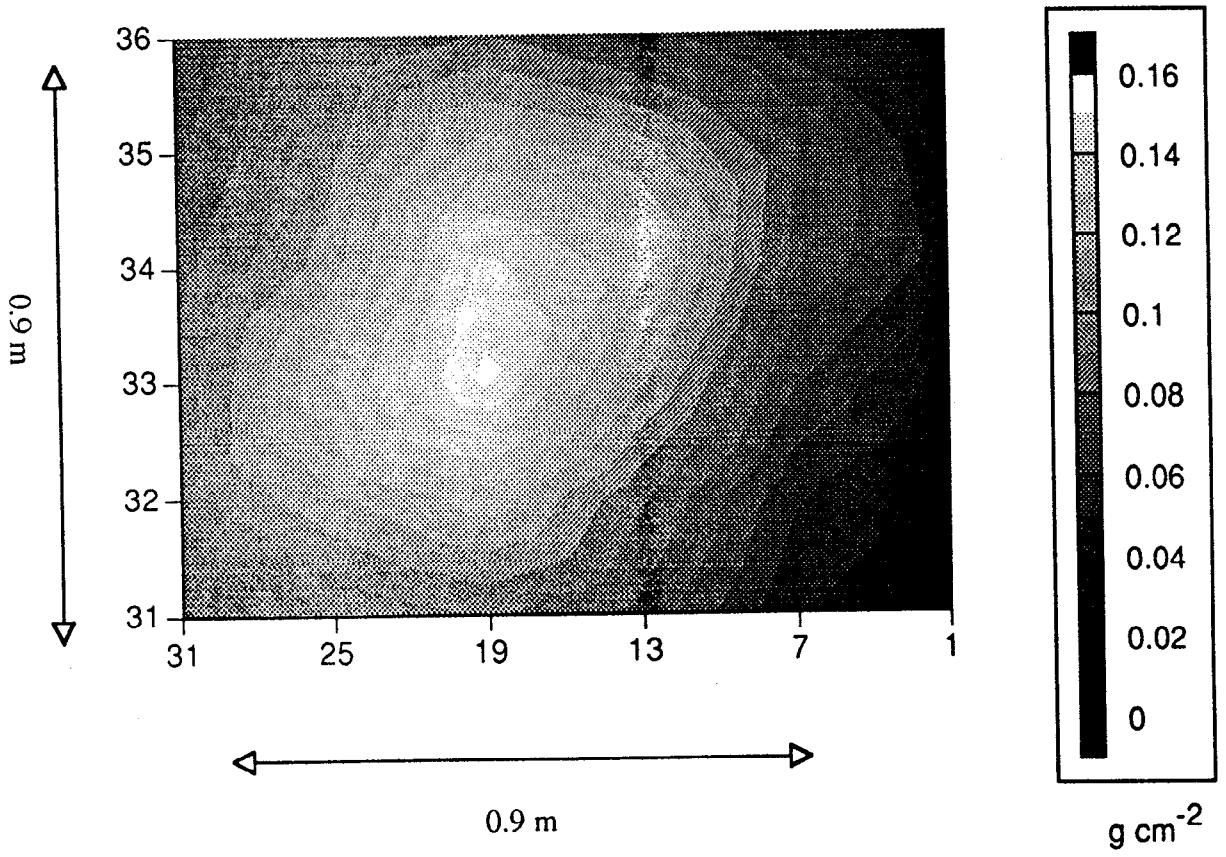

Figure 1. Spray deposition pattern from UniJet TG SS-1 nozzle (Spray Systems Inc.) for a 30s spray on a sampling grid of 36 points.

Nu-Lure®/malathion could be increased such that the total deposition of Malathion ULV would be correct for a 5-second spray. Therefore, the final mixing ratio of Nu-Lure®:malathion was changed to 10,000:1. Although this achieved approximately the correct deposition of active ingredient of malathion per unit area, the relative deposition of bait was extremely high resulting in a film of bait mixture deposited on the matrices, rather than discrete droplets of appropriate size. The implications of the changes in mixing ratio and the 15% dilution with water to achieve atomization are addressed in the Conclusion section.

Controlled Exposure Methodology

In order to simulate the environmental conditions of the aerial sprays, all experimental applications were carried out in the evening. Applications were made in a 9.1 x 14.6 m (30 x 48 foot) polyethylene-covered greenhouse at the DPR/UCR field site (Field 8C, UC Riverside Citrus Experiment Station). The spray nozzle was mounted at the top of the greenhouse, yielding a spray height of 3.5 m to the floor and an effective circular spray diameter of approximately 0.9 m (3 feet). A temporary plastic-film covered floor (1.5 m diameter) was placed on the floor beneath the spray zone. This temporary floor was then covered with bench-top absorbent material (BenchKote®) to eliminate splashing, and the matrices moved on and off as necessary (Figure 2). The absorbent material was changed between each spray application.

Since the spray diameter was small, 11 spray applications were required in order to treat all the matrices. A random selection of matrices were placed within the spray area for each spray application. Half-pint (~0.24 L, 8.4 cm deep) clean glass canning jars were used to monitor inter-spray conformity. In order to minimize the effects of contamination arising from spray adhering to the external surfaces of the jars, each jar was wrapped in a

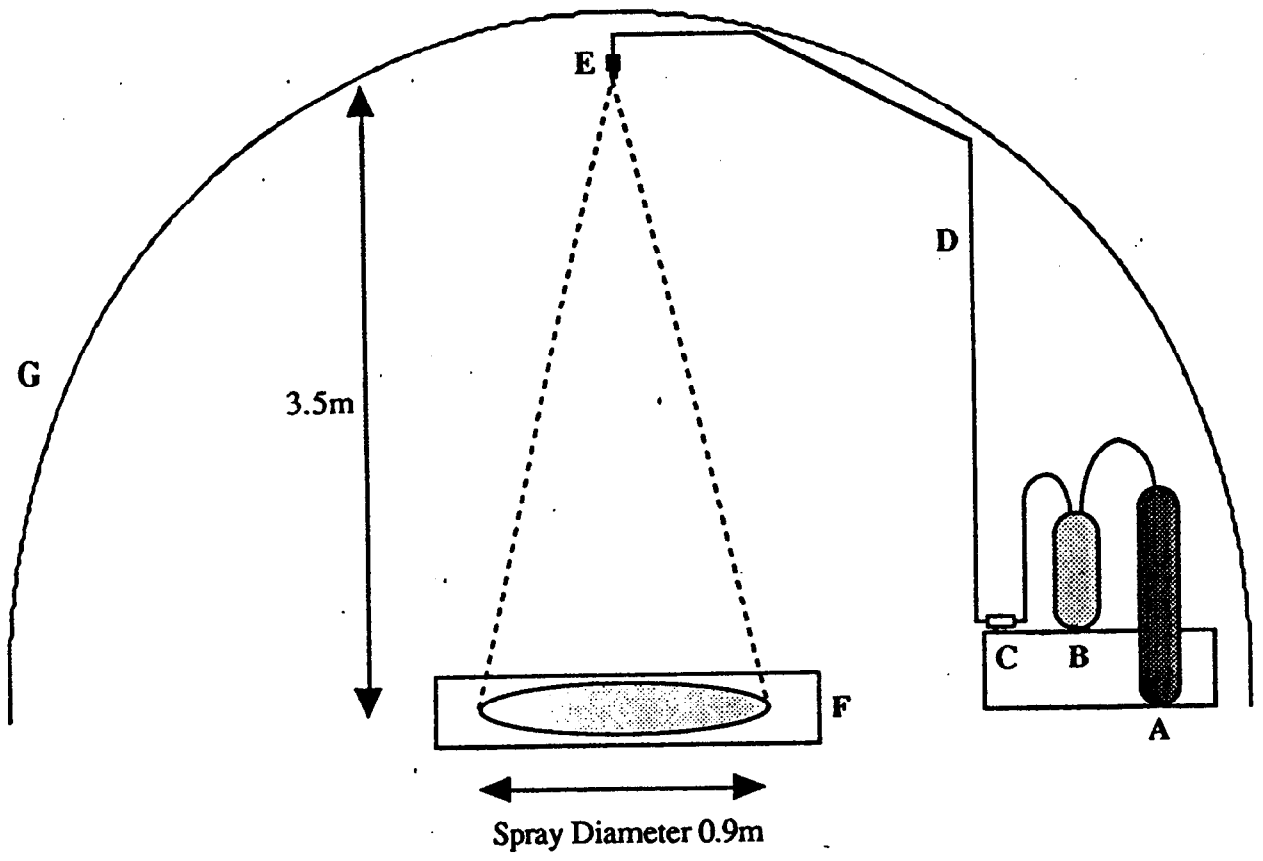

Figure 2. Spray nozzle assembly and environment. A. N_2 gas cylinder. B. Stainless steel pressure cylinder containing the malathion/Nu-Lure mixture pressurized to 75psi. C. Electronically operated solenoid. D. 0.098 cm Teflon TFE® tubing. E. UniJet TG SS-1 nozzle (Spray Systems Inc.). F. 2.25 m^2 plastic covered floor. G. 9.14 x 14.63 m polyethylene covered greenhouse.

piece of plastic film which was removed and discarded after treatment. Spray variability was measured by capturing spray deposition in two half pint glass jars per spray for each of the eleven sprays. These jars were placed in the same locations for each of the 11 sprays. The contents of the jars were measured for concentration ($\mu g\ cm^{-2}$) and μg malathion per gram bait was calculated from measurements of total deposition weight in each jar.

Matrices

Five matrices were chosen to represent materials typical of an urban setting: sand, soil, water, tomato fruit, and lettuce leaves (Table 3). Sand was examined because of the concern for residual malathion in children's play sand. A bulk sample of dry play sand was placed in an open container within a Teflon FEP® film-covered chamber and the moisture content monitored daily until an equilibration point of < 1% moisture was reached. Samples of fifty grams (50.00g) were placed in half-pint (~0.24 L) clean glass canning jars (aperture area = 29 cm^2). The horizontal surface of the sand within the jars was determined to be 25.5 cm^2 and the depth 1.5 cm. The jars were positioned under the application spray nozzle and exposed to the Nu-Lure®/malathion spray. By placing this matrix directly within the collection vessel, no subsequent transfers were necessary, thus reducing sampling and analytical errors.

As a comparison to play sand, a local, naturally occurring soil from the UC Riverside Citrus Experiment Station (Hanford sandy loam; Typic Xereorthents, coarse-loamy, mixed, nonacid, thermic) was included in this study. Organic components in soil may affect the dissipation of malathion and differ from that measured in sand. Grab samples from the top 15 cm of the soil profile were collected, bulked, and mixed by hand to ensure homogeneity. The fine-earth fraction was used (<2 mm), and particle size analysis, carbon content, and pH determined. Prior to exposure, the soil was placed in an open

Table 3. Physical/Chemical Characteristics of the Non-Biological Experimental Matrices

Matrix	pH	Particle Size Analysis*			Organic Carbon†	Mean Moisture Content
		Sand	Silt	Clay		
		---------- % ----------			----- % -----	----- % -----
Soil	6.3	66.0	24.0	10.0	0.6	0.78 ± 0.14
Sand	7.1	100.0	0.0	0.0	0.0	0.23 ± 0.02
Water§	7.56 ± 0.21	-	-	-	-	-

* Hydrometer Method
† Dry Combustion Method
§ Riverside City Water

container within a Teflon® chamber and the moisture content monitored daily until an equilibration point of approximately 1% was reached. Then, fifty grams (50.00 g) of soil was placed in half-pint clean glass canning jars (aperture area = 29 cm^2) and positioned under the application spray nozzle. Samples for residual analysis were taken over time according to the predetermined schedule.

In order to simulate entrapment of baited malathion in backyard wading pools or other exposed water surfaces typical of many city backyards, 28 Pyrex® brand glass dishes (20.3 cm x 20.3 cm x 5.1 cm : aperture area = 412 cm^2) each filled with 1 liter of city-supplied water (surface area = 400 cm^2, depth 3.3 cm) were placed beneath the application nozzle and received an application of the Nu-Lure®/malathion mix.

Malathion/Nu-Lure® mixture deposition on plants or vegetables was measured on two kinds of plants representative of those typically grown in urban gardens. Tomato fruit (Lycopersicon esculentum Mill. var. 'Celebrity') conveniently allowed for the determination of both surface deposition and absorption into the fruit. Leaf lettuce plants (Lactuca sativa L. var. 'Simpson') were used to determine the deposition and capture of malathion bait mixture on a leafy surface. One plant was used for each replication. For tomato plants (60 day old from transplant), foliage covering the fruit was removed prior to malathion/Nu-Lure® application, so exposure of the fruit to the spray could be attained. Tomato plants had a minimum of two fruit each. For lettuce plants (25 day old from seeding), necrotic material was trimmed prior to exposure. Twenty-eight individual plants of each vegetable were used in the study. Tomato fruit were of mature size (5.97 cm W x 5.50 cm H, but not fully ripened) and therefore did not increase appreciably in size over the sampling periods, reducing error expected to dilution by growth. However, lettuce leaves did expand over the duration of the experiment and the data required standardization to account for increased biomass (see Results: Degradation of Malathion on Lettuce). Mean initial size was 13.52 cm^2 and mean final size was 40.07 cm^2.

Sampling Methodology

At the conclusion of each spray application, the matrices were transferred to four octagonal chambers (2.4 m diameter by 2.3 m high, Teflon® FEP film (3 mil)) adjacent to the greenhouse at the field site. Construction and characteristics of these chambers have been previously documented by Musselman et al., (1986) (Figure 3). Ambient temperature and relative humidity were maintained by filtered air circulated in each chamber, although chamber temperatures were observed to be slightly higher than ambient around midday. Air flows through the chambers were approximately 335 ft^3/min, resulting in approximately 0.67 air changes/min. Light intensity within chambers averages 11% less than ambient (Musselman et al., 1986). Each chamber was constructed with a cement, epoxy-sealed floor connected to a 55 gallon storage drum by a center drain, allowing chambers to be thoroughly cleaned at the conclusion of the experiment and the waste water contained and disposed of appropriately. All matrices were divided equally among the four chambers, and one sample from each chamber was taken at each sampling interval.

Potential chemical interactions between atmospheric oxidants and malathion exist. These interactions could be important in areas with high ambient oxidant loads, e.g., the southern California region. The reduction of ambient oxidants by the chamber charcoal filters could potentially slow the degradation rate of malathion, both on the matrix surface and in gas phase emissions. However, during the experimental period, monitored ambient levels of oxidants at the University of California Riverside, Statewide Air Pollution Research Center, were quite low (June, 1992 24-hr mean ozone = 0.042 ppmv) and thus probably had a negligible effect on degradation rates.

Samples for malathion and malaoxon residual analysis were taken according to the following time schedule. The first sample was collected immediately after the

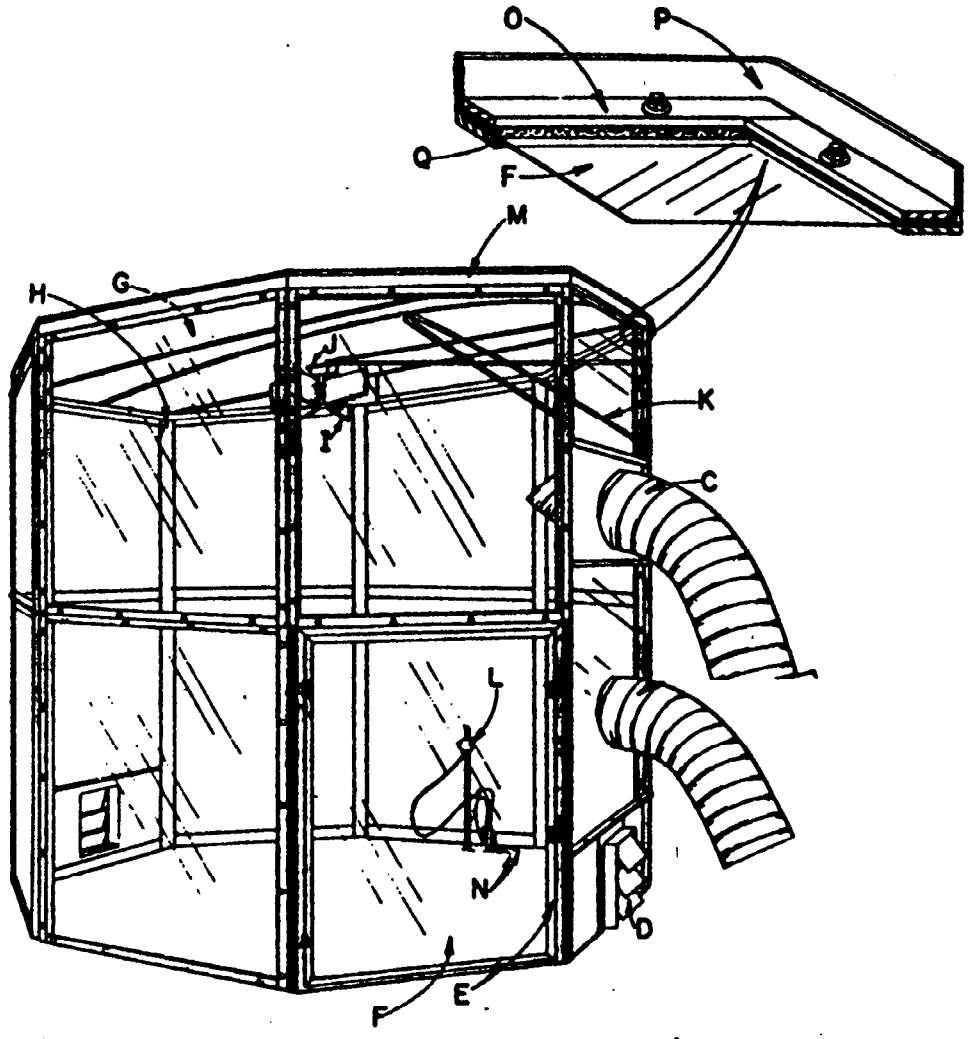

Figure. 3. Detailed drawing of a field fumigation chamber:

A) Air inlet from filtered blowers. B) Return duct for air circulation. C) Aluminum ducting. D) Optional louvers for air exiting chamber. E) Chamber door. F) Teflon® film on chamber wall. G) Chamber Teflon® top panel. H) Aluminum conduit post for attaching wall panels. I) Impellor (optional). J) Impellor motor and mount (optional). K) Impellor support frame. L) Pollutant air sample tube. M) Chamber top frame support. N) Thermocouple sensors. O) Aluminum bar to secure Teflon® film to aluminum angle. P) Aluminum angle wall frame. Q) Weather strip.

(Adapted from Musselman et al., 1986)

malathion/Nu-Lure® application (18:00 h PST June 15, 1992), followed by the second (12 hours post application) and third (24 hours (1 day) post application) samples on June 16, 1992 at 6:00 and 18:00 h PST, respectively. Four subsequent samplings occurred at 18:00 h PST at intervals of 48 hours (2 days), 96 hours (4 days), 239 hours (10 days), and 504 hours (21 days) post application. At each sampling time, four replicates of each matrix were collected, one from each of the four chambers.

Jars containing the sand or soil samples were weighed, sealed with aluminum foil-lined lids, and stored on dry ice until chemical analysis. Water samples were monitored daily until collection and the sample volume maintained at approximately 1 liter by adding city-supplied water to compensate for evaporation. At each sampling time, the water from one dish in each chamber was hand-stirred for 1 minute using a glass stirring rod, and then poured through a large glass funnel into a 1-liter amber bottle with a Teflon®-lined lid. Each bottle was weighed to determine the size of the sample, and the pH and temperature of each sample were also measured. No pH adjustment was made to the water samples prior to analysis, as laboratory degradation studies conducted by the contracting laboratory indicated that this step was not required (APPL Laboratories, personal communication). Samples were stored on ice until analysis.

Two tomato fruits were collected from each replicate plant per sampling period. In order to minimize effects of fruit size, tomato fruits that were nearest to maturity were selected at each sampling period. As such, no appreciable increase in fruit size occurred between spray application and sampling. The stem-to-flower and perpendicular diameters of each fruit were measured using stainless steel electronic calipers while the fruit was attached to the plant, and then each fruit was removed using clippers, and placed directly into a pre-weighed one-quart clean glass canning jar. This procedure required no direct handling of the fruit, minimizing any sampling errors due to loss of dislodgeable material, or through

cross-contamination. Each jar was weighed to determine the mass of fruit per sample. Samples were refrigerated on ice until analysis. Two lettuce leaves were collected from each replicate plant at each sampling time. The leaves were clipped from each plant using stainless steel scissors, and each leaf placed between two pieces of colorless transparent Teflon® sheeting (approx. 4" x 4") and its area determined using a LiCor Li3000 Leaf Area Meter. Any dislodgeable material removed from the leaf surface onto the Teflon® sheeting was collected by rinsing with a small amount (< 5 ml) of deionized water from the Teflon® sheets into the sampling jar. Leaf surfaces were still wet from the Nu-Lure®/malathion application directly after exposure, so the leaf area for the first sampling interval (immediately post-application) was measured prior to spraying. Two leaves were detached from each of the four replicate plants and their leaf area determined. Detached leaves were then repositioned on the plant and exposed to the malathion/Nu-Lure® spray. Samples were stored on ice until analysis.

All samples were shipped to the contracting laboratory by 'overnight' delivery. Dislodgeable residues on tomatoes and lettuce leaves were extracted upon arrival at the laboratory (Appendix A). Water and sand/soil residues were processed within a week of sample receipt (Appendix A). Sample residue analyses were carried out by APPL Laboratories (Fresno, CA) utilizing established and validated methodology for the analysis of malathion and malaoxon. Soil and sand were extracted with ethyl acetate. All other matrices were extracted with methylene chloride. Samples were analyzed using a Hewlett/Packard gas chromatograph equipped with dual NP detectors (325°C), 7673A auto injectors (200°C), and a Resteck RTX-35 column (0.53mm I.D. x 30 m). A J & W DB-5 column was used for confirmation (0.53mm I.D. x 30 m). A 3 ml injection sample was used, and oven temperatures ramped from 100°C to 280°C during a 0.5 hr run time.

Sample Integrity

All personnel who came in contact with samples wore disposable gloves which were changed between samples. Contaminated equipment was immediately sealed in plastic garbage bags, removed from the sampling area, and either cleaned or safely discarded. The reusable materials were washed with a soap solution, and then rinsed with water, deionized water, and isopropyl alcohol.

Each sample had a dedicated chain of custody record on which all sampling information was recorded. This document accompanied the sample from the time the sample was collected until the sample was analyzed. Each time the sample changed hands, the chain of custody was signed by the person relinquishing the sample and the person receiving the sample. The samples were secured in locked university buildings during storage, and sealed ice-chests during courier transport.

Quality Control

The quality control program was designed to assess the accuracy and precision of the analyzing laboratory (APPL Inc., Fresno, CA), and to detect sample contamination which occurred at the sample site or during transport. The terms "blank" and "blank matrix sample" describe a sample which consisted of uncontaminated sample medium (soil, sand, city water, tomato fruits, and lettuce leaves, as well as clean sample jars). The term "blind spike" describes an uncontaminated sample medium to which a known amount of Nu-Lure®/malathion mixture was added at the time of sample collection at the sample site. The term "spike" refers to an uncontaminated sample medium to which a known amount of chemical (malathion or malaoxon analytical standard) was added by APPL Inc.

Method validation spikes were prepared by APPL Inc., extracted and analyzed to determine the accuracy and precision of the proposed method of analysis. Laboratory

spikes were used to determine the ongoing accuracy and precision of analysis. Both these spike samples were prepared without Nu-Lure® bait. Blind spikes (spikes disguised as actual samples) were prepared at the experimental site, and were periodically submitted to the analyzing laboratory. They comprised a known amount of malathion analytical standard, Nu-Lure® bait, and uncontaminated sample matrix.

Laboratory blanks were included to determine if sample contamination was occurring in the laboratory. Field blanks, prepared in the field, were submitted to determine if sample contamination occurred during sampling, transport, or storage.

Storage stability tests were conducted to determine if any dissipation occurred between the time the samples were collected and the time they were analyzed. Dissipation studies were carried out in both the presence and absence of the Nu-Lure® bait.

Results and Discussion

Spray Variability

Concentrations of malathion determined in each inter-spray conformity jar ranged from 0.92 to 14.00 $\mu g\ cm^{-2}$ (854 - 13,000 $\mu g\ ft^{-2}$), with a mean value of 4.15 $\mu g\ cm^{-2}$ (3855 $\mu g\ ft^{-2}$). This value is higher than the mean target concentration of 2.13 $\mu g\ cm^{-2}$ (1980 $\mu g\ ft^{-2}$), and resulted from a computational error in determining the formulation and was discovered after the spray trials were completed. However, this mean deposition is within the range reported from field sampling in 1990 (CDFA, 1991). Since each jar was weighed before and after the spray application, it was possible to determine the amount of malathion/bait mixture collected in each jar, and from this determine the concentration of malathion in the baited mixture. A range of 77.48 to 159.00 μg malathion g^{-1} spray mix per jar was determined, with a mean value of 118.49 $\mu g\ g^{-1}$.

F-tests for differences in variance between sprays were not significant. These tests were done with an experiment-wide p value of 0.05. Differences in means between individual sprays were also tested using a one-way analysis of variance (ANOVA). No significant differences were found in either variable between sprays (Table 4) with p values of 0.7493 and 0.0815 for concentration and μg malathion/g bait, respectively. Deposition variability within an individual spray was large so the power of this test to detect differences between sprays was low. Future projects should include more jars per spray to address this variability.

Quality Control Analysis

Recovered malathion from blind spike quality control samples demonstrated highly variable results (Table 5). Of the 18 blind spike samples submitted, 11 samples (61%) varied from theoretical spiked concentrations by greater than 20%. Recovery values ranged from a low of 51% to a maximum of 270%. Of these submitted samples, the malathion recovery in 8 samples (44%) exceeded the spiked concentration by a minimum of 25%. It is not possible at this point to determine to what the discrepancies can be attributed. However, these blind spikes did contain malathion with the proteinaceous bait, while the laboratory matrix duplicate blanks did not. Either the laboratory analyses were in error or the initial blind spike procedure was in error in delivery of the correct malathion concentration. Because of the analytical variability, the incorporation of additional sprays jars in each spray to address spray variability would not necessarily increase reliability.

Matrix duplicate spikes performed by the analysis lab (APPL Laboratories, Fresno, CA) demonstrated more consistent recovery than blind spike samples submitted as part of the experimental protocol. Malathion recovery for the various media ranged from 71% to 85% while malaoxon recovery ranged from 71% to 114% (Table 6). Again, the matrix duplicate spikes included only malathion without the Nu-Lure® proteinaceous bait,

Table 4. One-way Analysis of variance tests for mean differences in Malathion Concnetration and µg malathion/g bait between sprays.

Concentration

Source	df	SS	MS	F	p
Spray	10	69143.703	6914.37	0.647	0.7493
Residual	11	117483.945	10680.359		

Coeffecient of Variation: 86%

µg mal./g. bait

Source	df	SS	MS	F	p
Spray	10	4875.495	487.549	2.421	0.0815
Residual	11	2214.919	201.356		

Coeffecient of Variation: 12%

Table 5. Blind Spike Recoveries

Study: 119
Analyte: Malathion

Lab: APPL

Sample #	Matrix	Reported Concentration µg/sample	Spike Level µg/sample	Recovery %	MDL µg/sample
100	Jar	96.4	100.0	96.4	10
193	Jar	63.0	50.0	126	10
257	Jar	51.2	25.0	204.8	0.5
101	Soil	125.0	100.0	125	5.0
192	Soil	49.75	50.0	99.5	5.0
259	Soil	47.5	25.0	190	1.25
102	Sand	100.0	100.0	100	5.0
191	Sand	47.35	50.0	94.7	5.0
258	Sand	67.5	25.0	270	1.25
103	Water	706.0	1000	70.6	58.0
190	Water	255.0	500	51	60.0
260	Water	605.2	250	242	60.0
104	Tomato - dislodgeable	425.0	300	141.6	25.0
188	Tomato - dislodgeable	144.0	150	96.0	0.5
256	Tomato - dislodgeable	175.0	75	233.3	5.0
105	Lettuce - dislodgeable	108	100	103	5.0
189	Lettuce - dislodgeable	55.1	50	110.2	0.5
255	Lettuce - dislodgeable	64.6	25	258.4	5.0

Table 6. Malathion and Malaoxon Recovery from Matrix Duplicate Blanks. Analytes Do Not Include Nu-Lure® Proteinaceous Bait.

		Percent Recovery for					
		Malathion			Malaoxon		
Media	N*	Mean	SD	CV	Mean	SD	CV
DI Water	12	76.5	10.2	13.3	71.6	22.8	31.9
Jar	8	83.7	10.3	12.4	85.5	14.1	16.4
Sand	8	85.4	11.1	13.0	114.1	17.9	15.7
Soil	14	83.8	8.4	10.1	101.8	25.5	25.1
Lettuce	12	79.2	11.8	14.9	105.5	20.7	19.6
Lettuce/Int.	8	66.7	14.0	20.9	83.5	11.8	14.2
Tomato	14	74.3	17.7	23.8	98.1	22.8	23.2
Tomato/Int.	10	71.3	24.8	34.8	79.1	23.8	30.1

* Number of observations

and this may account for the higher accuracy of the results than obtained with the blind spike samples.

Statistical Treatment of Residue Data

There are several a priori assumptions which restrict the types of models which should be used to fit the data in order to provide the most realistic predictions from the observed data. First, the malathion concentrations are highest at time zero; higher values at any other time are due to variability in the data. There was only one spray and the amount that was sprayed at that time is the maximum. If the data had shown an increase in malathion at hour 12 it would not have made sense to fit a model which would predict increases in malathion for the first 12 hours because such a curve would not provide realistic exposure assessments. Second, this is a dissipation study and thus the malathion concentrations can either stay the same or decrease over time. Increases are not possible at any point in the study except for sample variation. Third, the malathion concentrations can not drop below zero. We can thus restrict the types of models under consideration to those which will give predictions which correspond to these facts.

First, linear and quadratic regressions were fit to the data. The concentrations were not adequately fit for any of the matrixes by these regressions. Second, log transformations of the data were attempted to equalize the variances and to linearize the data for analysis. The transformed data exhibited smaller, but still unequal, variances over time and were still not well fit with linear regressions. A number of other transformations were tried without success so the original untransformed data were used for the analysis to simplify interpretation.

The concentrations were then fit with simple exponential decay functions. The exponential decay functions resulted in a poor fit and underestimation of the concentrations because the initial decline in malathion concentration was too rapid. The actual decay rates were slower than allowed in exponential decay. The mean malathion residue concentrations determined over the 504 hr time period were then fit with double exponential decay functions with the exception of the lettuce internal concentrations (Table 7). The lettuce internal concentration was fit with a simple exponential decay model. The lettuce internal concentrations were high at hour zero and then appear to drop off rapidly by hour twelve. The exponential decay model does not fit well after 12 hours. The 24 hour and 239 hour observations are much larger than allowed for by the exponential model but because of their smaller size compared to the initial values the R^2 is still quite good. Therefore the exponential decay model was used simply to get an estimate of the initial drop off rate in lettuce internal malathion concentration.

The double exponential decay model takes the form:

$$Y=P1*EXP(P2*X) + P3*EXP(P4*X)$$

where Y is the malathion variable and X is Hour. The sum of P1 and P3 are the predicted malathion level at Hour 0 and P2 and P4 are decay rate constants. The two decay rates could correspond to a number of processes such as volatilization and biological degradation. The simple exponential decay model is obtained by setting P3 and P4 equal to 0. The models fit well for the various matrices (Table 7) with the exception of the lettuce internal malathion concentration.

Four laboratory variables were analyzed as possible covariates to reduce the sample variability. The variables were:

(1) Number of days from sampling to extraction

(2) Number of days from sampling to analysis

Table 7. Regression Model Parameters

Model parameters and asymptotic standard errors for exponential decay.

Y=P1*EXP(P2*X) + P3*EXP(P4*X)

Sample Media	P1	P2	P3	P4	R-square
Soil	862.377 (173.798)	-0.140 (0.044)	273.335 (41.349)	-0.001 (0.001)	0.8962
Sand	583.300 (51.259)	-0.008 (0.0004)	2685.645 (521.50)	-8.252 (75.30)	0.9999
Tomato	0.020 (0.038)	-0.038 (0.189)	0.150 (0.029)	-0.006 (0.0004)	0.9981
Tomato Internal	11.475 (0.150)	-0.003 (0.00003)	67.088 (0.442)	-0.033 (0.0003)	0.9999
Lettuce	0.138 (0.015)	-0.007 (0.0008)	0.803 (0.096)	-0.150 (0.020)	0.9982
Lettuce Internal	848.595 (286.405)	-0.050 (0.011)	0	0	0.9873

(3) Number of days between extraction and analysis

(4) Laboratory Operator (analyst)

None of the variables significantly correlated with the malathion variables and, therefore, were not used in the subsequent analysis. Two of the 24 hr soil samples were analyzed 29 days after extraction and were much lower than the other 24 hr samples. These two samples were dropped from the analysis and the mean was taken using the remaining two replicates.

Degradation of Malathion on Sand

Malathion concentrations at each sampling period are reported in Table 8. The degradation of malathion in the sand matrix initially was very rapid, with only 16% of the original 0 hr concentration predicted at 12 hr using a double exponential decay function (Figure 4 Table 9). The fit of the data using this decay function was extremely good (R^2= 0.9999, Table 7). Malathion residue levels had dissipated to <1% by 504 hr (21 days). The sand matrix had no detectable organic matter content and this may explain the more rapid disappearance of malathion compared to the soil matrix.

Malaoxon was not detected in the sand matrix until the 239 hr sampling time (Figure 5, Table 10).

Degradation of Malathion on Soil

The degradation of malathion on a soil matrix was best described using a double exponential decay function (Figure 6). The initial loss of malathion was greatest in the first 12 hr followed by a slower decay for the rest of the time period. After 12 hr, the predicted residues were decreased to only 39% of the time 0 hr values (Table 11). At 504 hr (21 days), the predicted residue was approximately 15 % of the 0 hr value (Table 11).

Table 8. Concentration of malathion residues in sand samples over a 21-day period.

Sampling Interval ------ hours ------	Reported Concentration -------- $\mu g\ kg^{-1}$--------	
	Mean	SD*
0	3267.5	3572.8
12	522.5	528.4
24	426.5	361.0
48	388.0	166.3
96	285.0	317.6
239	272.2	247.2
504	7.9	10.6

*SD = Standard Deviation

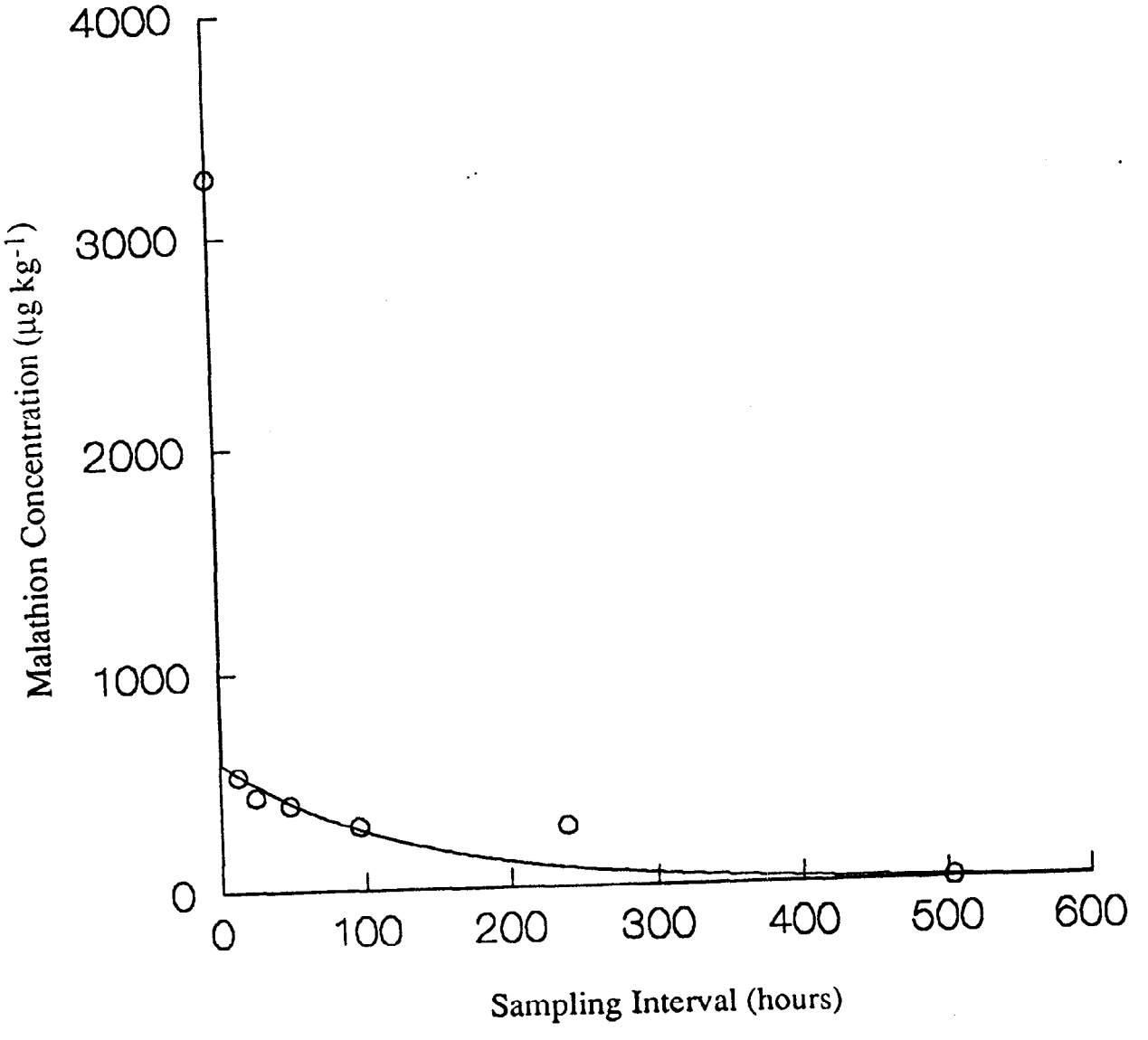

Figure 4. Double exponential decay of malathion residue concentrations on sand over a 21-day period. Y=583.300*EXP(-0.008*X) + 2685.645*EXP(-8.252*X), R^2 = 0.9999. Data points are mean values of four replicate samples.

Table 9. Predicted concentrations of malathion residues in sand samples over a 20-day period.

Days	Predicted Concentration[a]	Predicted Percentage[b] of 0 h Concentrations
	------ $\mu g\ kg^{-1}$ ------	-------- % --------
0.5	529.9	16.2
1	481.4	14.7
2	397.3	12.2
3	327.9	10.0
4	270.6	8.3
5	223.3	6.8
6	184.3	5.6
7	152.1	4.7
8	125.6	3.8
9	103.6	3.2
10	85.5	2.6
11	70.6	2.2
12	58.2	1.8
13	48.1	1.5
14	39.7	1.2
15	32.7	1.0
16	27.0	0.8
17	22.3	0.7
18	18.4	0.6
19	15.2	0.5
20	12.5	0.4

[a] Predicted concentrations based on a weighted double exponential decay regression.

[b] Predicted percentage of concentations compared to time 0 hours, i.e. immediate post-application samples.

Table 10. Concentration of malaoxon in sand samples over a 21-day period.

Sampling Interval† ------ hours ------	Reported Concentration -------- $\mu g\ kg^{-1}$--------	
	Mean	SD*
239	46.8	12.9
504	22.1	19.5

*SD = Standard Deviation

†No malaoxon residues were detected in sand samples before the 239 h sampling period.

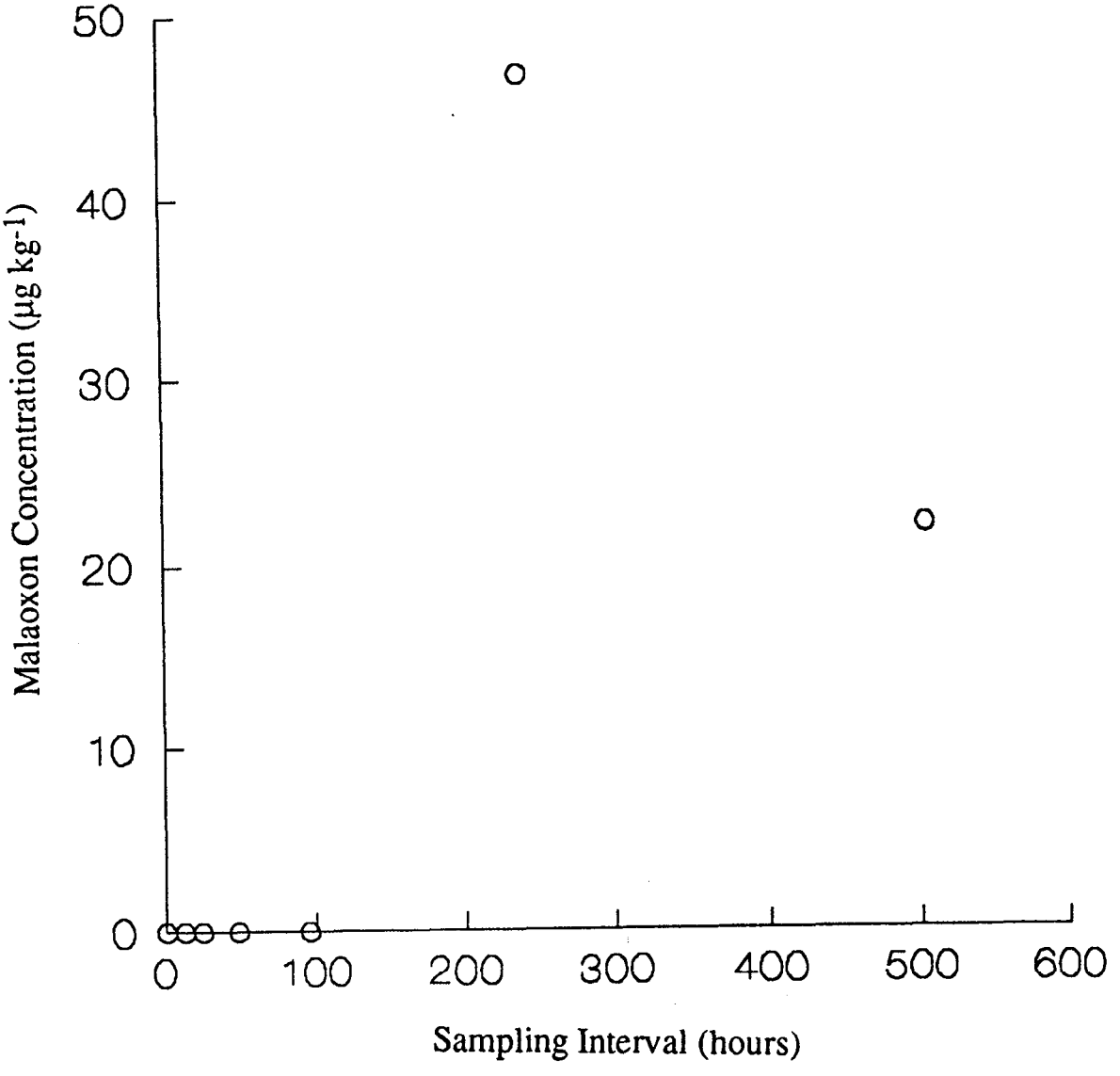

Figure 5. Malaoxon residue concentrations on sand over a 21-day period. Data points are mean values of four replicate samples.

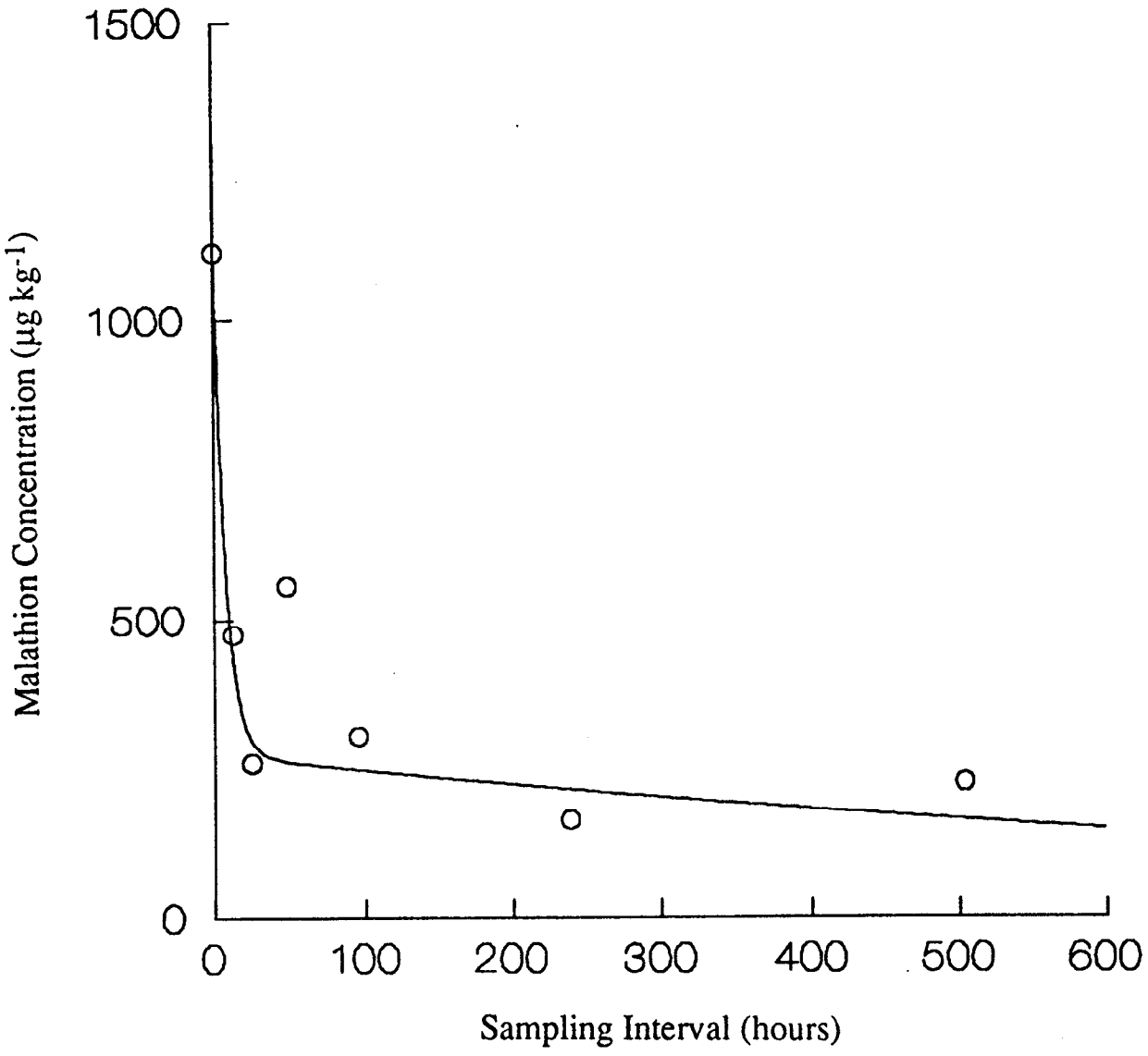

Figure 6. Double exponential decay of malathion residue concentrations on soil over a 21-day period. Y=862.377*EXP(-0.140*X) + 273.335*EXP(-0.001*X), $R^2 = 0.8962$. Data points are mean values of four replicate samples.

Table 11. Predicted concentrations of malathion residues in soil samples over a 20-day period.

Days	Predicted Concentration[a]	Predicted Percentage[b] of 0 h Concentrations
	------ $\mu g\ kg^{-1}$ ------	-------- % --------
0.5	430.8	38.6
1	296.8	26.6
2	261.6	23.5
3	254.4	22.8
4	248.3	22.3
5	242.4	21.7
6	236.7	21.2
7	231.1	20.7
8	225.6	20.2
9	220.2	19.8
10	215.0	19.3
11	209.9	18.8
12	204.9	18.4
13	200.1	17.9
14	195.3	17.5
15	190.7	17.1
16	186.2	16.7
17	181.8	16.3
18	177.5	15.9
19	173.2	15.5
20	169.1	15.2

[a] Predicted concentrations based on a weighted double exponential decay regression.

[b] Predicted percentage of concentations compared to time 0 hours, i.e. immediate post-application samples.

Actual reported concentrations of malathion at the seven sampling intervals are shown in Table 12. The fit of the decay model was excellent, demonstrating an R^2 value (Coefficient of Determination) of 0.8962 (Table 7). The slow rate of decay after 12 hr indicated that the soil organic fraction, among other factors such as pH, temperature, moisture or surface absorption, may slow the degradation process compared to other matrices. Reports in the literature have indicated that degradation rates of similar pesticides have also been influenced by soil organic matter (Salzman et al., 1986).

Appearance of the malathion break-down product malaoxon was not evident until 96 hours (Figure 7, Table 13). The lack of appearance of malaoxon residual in the samples may not necessarily be indicative of lack of malathion degradation as volatilization processes may occur. Malathion or malaoxon concentrations were not measured in air, therefore the relative contribution of this process can not be determined.

Degradation of Malathion in Water

Degradation of malathion in water was not observed until the 239 hr sampling interval at which point it was < 1% of the 0 hour sample (Table 14). Due to the inconsistency of the malathion concentrations over time, no assessment was made from these data concerning degradation rates or half lives. Because no consistent trend in degradation of malathion in water was apparent, no statistical fit of these data was attempted.

Malaoxon was not detected in water samples until the final sampling interval (Day 20, 504 hr, Table 15) and these values were extremely small. It was not possible to determine if this is due to the low malathion degradation rate in the water or to other factors.

Table 12. Concentration of malathion residues in soil samples over a 21-day period.

Sampling Interval ------ hours ------	Reported Concentration -------- $\mu g\ kg^{-1}$--------	
	Mean	SD*
0	1115.00	759.41
12	475.00	91.92
24	259.50	269.06
48	556.00	303.23
96	303.75	212.91
239	165.65	98.71
504	226.50	91.53

*SD = Standard Deviation

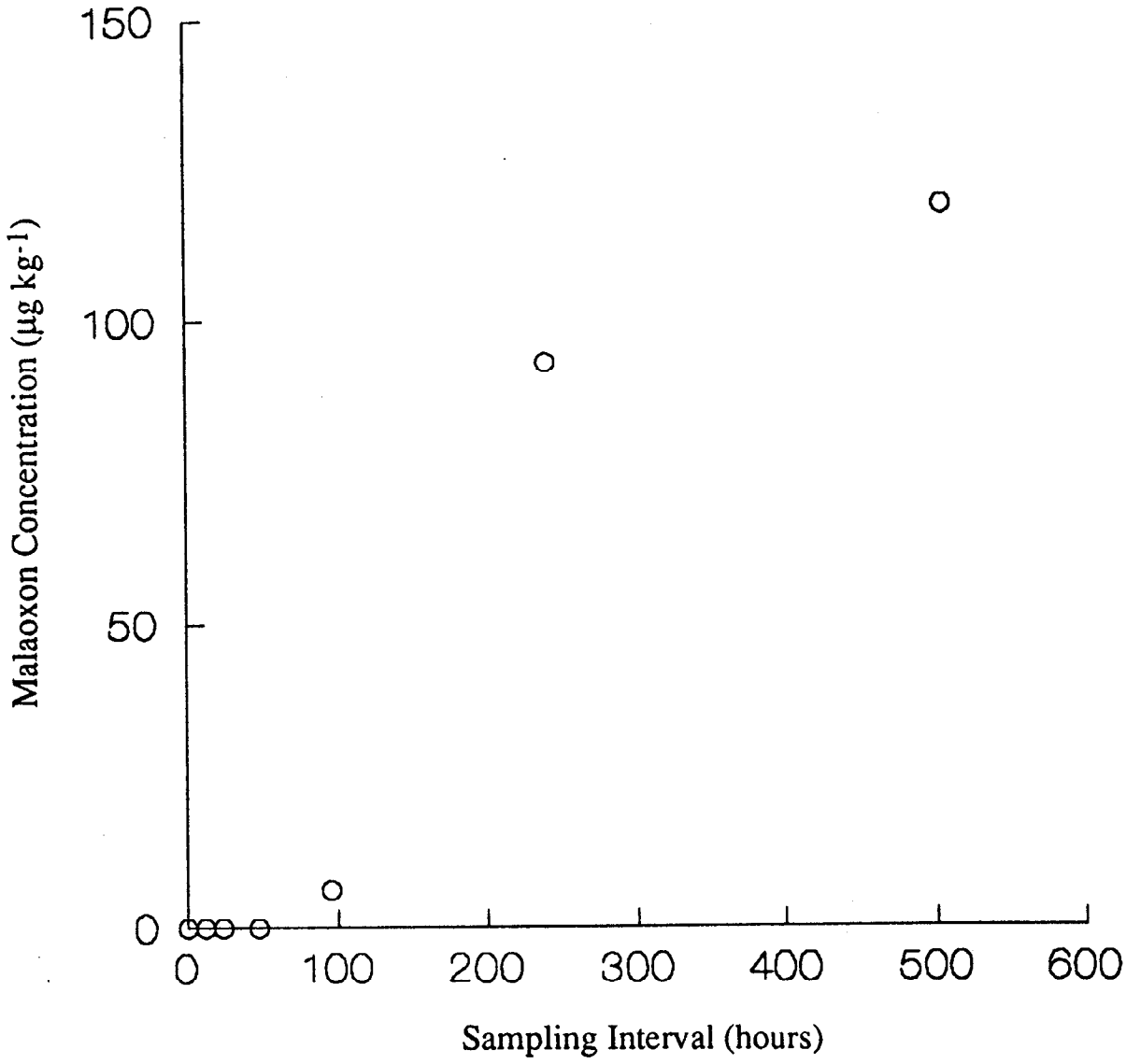

Figure 7. Malaoxon residue concentrations on soil over a 21-day period. Data points are mean values of four replicate samples.

Table 13. Concentration of malaoxon in soil samples over a 21-day period.

Sampling Interval† ------ hours ------	Reported Concentration -------- $\mu g\ kg^{-1}$--------	
	Mean	SD*
96	6.30	12.60
239	93.10	49.37
504	119.15	66.38

*SD = Standard Deviation
†No malaoxon residues were detected in soil samples before the 96 h sampling period.

Table 14. Concentration of malathion residues in water samples over a 21-day period.

Sampling Interval ------ hours ------	Reported Concentration -------- $\mu g\ kg^{-1}$--------	
	Mean	SD*
0	744.4	346.7
12	1447.8	298.8
24	563.5	469.4
48	656.6	404.6
96	907.5	662.5
239	0.8	1.7
504	0.4	0.5

*SD = Standard Deviation

Table 15. Concentration of malaoxon in water samples over a 21-day period.

Sampling Interval† ------ hours ------	Reported Concentration -------- $\mu g\ kg^{-1}$--------	
	Mean	SD*
504	0.98	2.00

*SD = Standard Deviation

†No malaoxon residues were detected in water samples before the 504 h sampling period.

Degradation of Malathion on Tomato

The rate of degradation of malathion on the surface of tomato fruit, as measured by analysis of dislodgeable residual, was much slower than either the soil or sand matrices (Table 16). At 12 hr, approximately 90% of the malathion was predicted to remain based on the 0 hr sampling concentration (Table 17). At 4 days, the predicted residue was 50.1% of the 0 hr value. At 20 days, the predicted residue was 5%. A plot of the data (Figure 8) demonstrated that the double exponential decay function fit the data well (R^2=0.9981).

Internal concentrations of malathion in tomato fruit over time also fit the double exponential decay function, demonstrating a data fit of R^2=0.9999 (Figure 9, Table 7). The data indicated a more rapid decay than the dislodgeable malathion (Table 18), perhaps due to chemical interactions with cellular components. The predicted residue of malathion in fruit, expressed relative to the 0 hr level, was 72% at 12 hr, 53% at 1 day, and dropping to 3.5% at 20 days (Table 19).

Data at 24 hours were not included in the analyzed data sets. Apparent discrepancies for internal concentrations which were extremely large and out of range of surrounding data suggested that there may have been insufficient washing of the dislodgeables and subsequent contamination of the internal concentrations. Based on these considerations, it was deemed prudent to eliminate the 24 hour data points for both the dislodgeable and internal tomato malathion concentrations.

Malaoxon concentrations in tomato fruit were detected at the 96 hr sampling time (Figure 10).

Table 16. Concentration of dislodgeable malathion residues on tomato fruit samples over a 21-day period.

Sampling Interval ------ hours ------	Reported Concentration -------- $\mu g\ cm^{-2}$--------		Fruit Surface Area -------- cm^2--------	
	Mean	SD*	Mean	SD
0	0.169	0.158	247.7	46.0
12	0.167	0.070	203.7	22.3
24	0.178	0.149	196.1	19.0
48	0.120	0.074	215.4	26.6
96	0.073	0.016	220.7	50.6
239	0.070	0.044	197.1	15.9
504	0.008	0.008	199.8	34.4

*SD = Standard Deviation

Table 17. Predicted concentrations of dislodgeable malathion residues on tomato fruit samples over a 20-day period.

Days	Predicted Concentration[a] ------ $\mu g\ cm^{-2}$ ------	Predicted Percentage[b] of 0 h Concentrations -------- % --------
0.5	0.152	89.9
1	0.138	81.4
2	0.116	68.3
3	0.099	58.3
4	0.085	50.1
5	0.073	43.2
6	0.063	37.4
7	0.055	32.3
8	0.047	28.0
9	0.041	24.2
10	0.036	21.0
11	0.031	18.2
12	0.027	15.7
13	0.023	13.6
14	0.020	11.8
15	0.017	10.2
16	0.015	8.8
17	0.013	7.7
18	0.011	6.6
19	0.010	5.7
20	0.008	5.0

[a] Predicted concentrations based on a weighted double exponential decay regression.

[b] Predicted percentage of concentations compared to time 0 hours, i.e. immediate post-application samples.

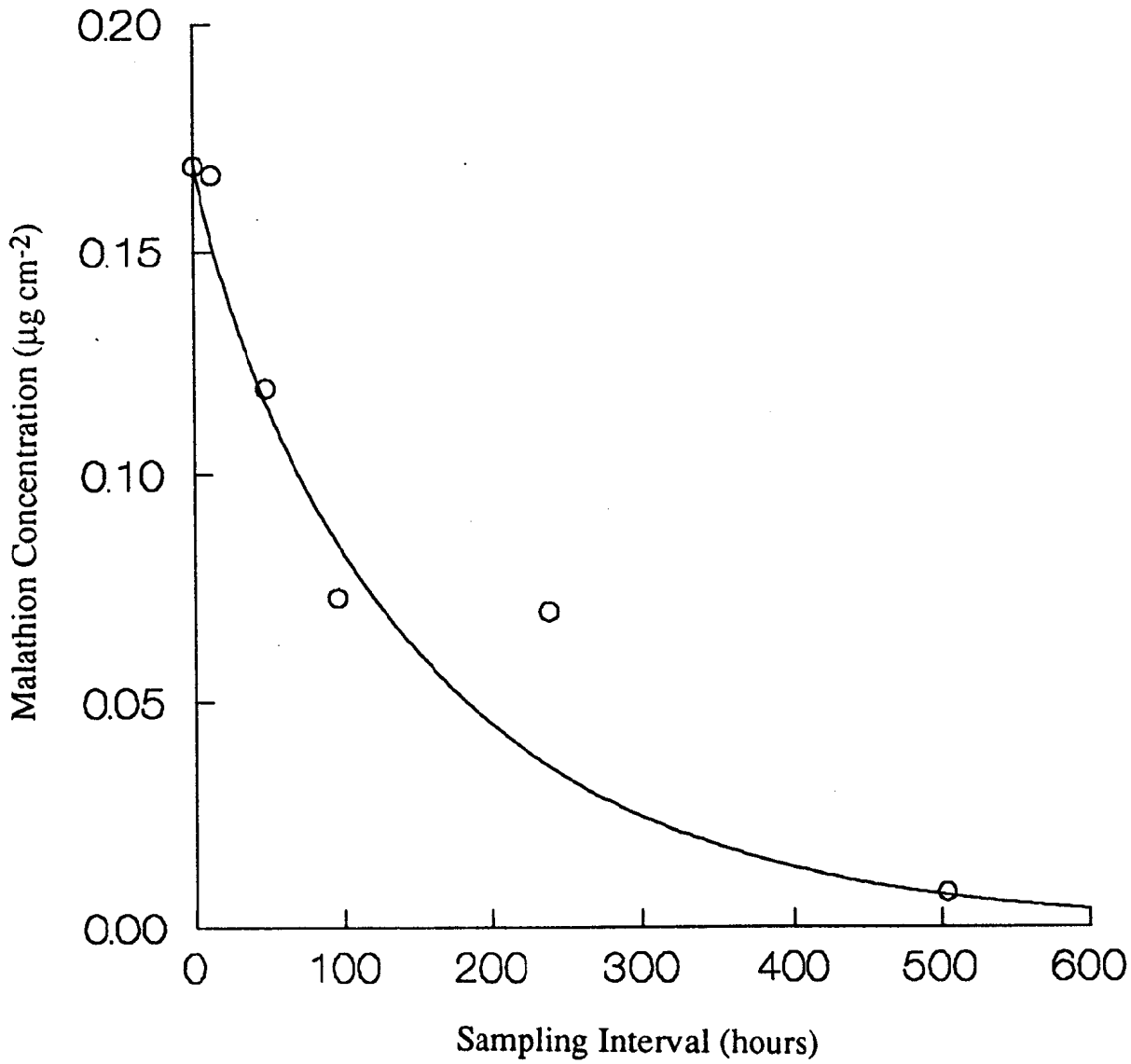

Figure 8. Double exponential decay of dislodgeable malathion residue concentrations on tomato fruit over a 21-day period. Y=0.020*EXP(-0.038*X) + 0.150*EXP(-0.006*X), R^2 = 0.9981.Data points are mean values of four replicate samples.

Table 18. Concentration of malathion residues in tomato fruit samples over a 21-day period.

Sampling Interval ------ hours ------	Reported Concentration -------- $\mu g\ kg^{-1}$--------		Fruit Weight -------- kg--------	
	Mean	SD*	Mean	SD
0	78.03	24.42	0.2466	0.0561
12	56.65	27.10	0.2203	0.0371
48	24.40	23.74	0.2116	0.0300
96	11.65	17.09	0.2464	0.0920
239	6.23	7.20	0.1939	0.0392
504	3.05	2.37	0.2078	0.0649

*SD = Standard Deviation

Table 19. Predicted concentrations of malathion residues in tomato fruit samples over a 20-day period.

Days	Predicted Concentration[a] ------ $\mu g\ kg^{-1}$ ------	Predicted Percentage[b] of 0 h Concentrations -------- % --------
0.5	56.2	72.1
1	41.1	52.6
2	23.7	30.4
3	15.5	19.8
4	11.4	14.6
5	9.3	11.9
6	8.0	10.3
7	7.2	9.2
8	6.6	8.4
9	6.0	7.8
10	5.6	7.2
11	5.2	6.7
12	4.8	6.2
13	4.5	5.8
14	4.2	5.4
15	3.9	5.0
16	3.6	4.6
17	3.4	4.3
18	3.1	4.0
19	2.9	3.7
20	2.7	3.5

[a] Predicted concentrations based on a weighted double exponential decay regression.

[b] Predicted percentage of concentations compared to time 0 hours, i.e. immediate post-application samples.

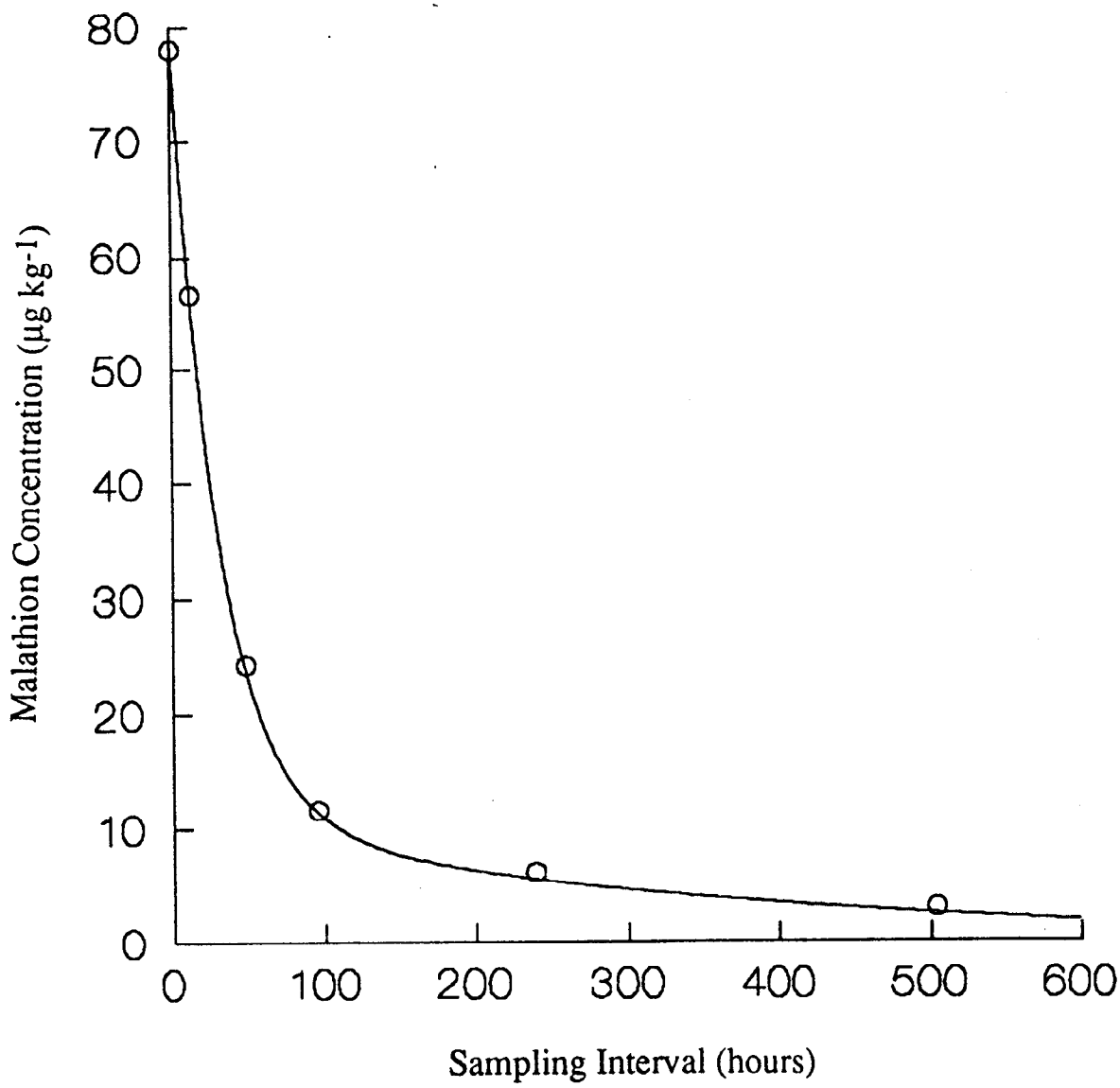

Figure 9. Double exponential decay of malathion residue concentrations in tomato fruit over a 21-day period. Y=11.475*EXP(-0.003*X) + 67.088*EXP(-0.033*X), $R^2 = 0.9999$.Data points are mean values of four replicate samples.

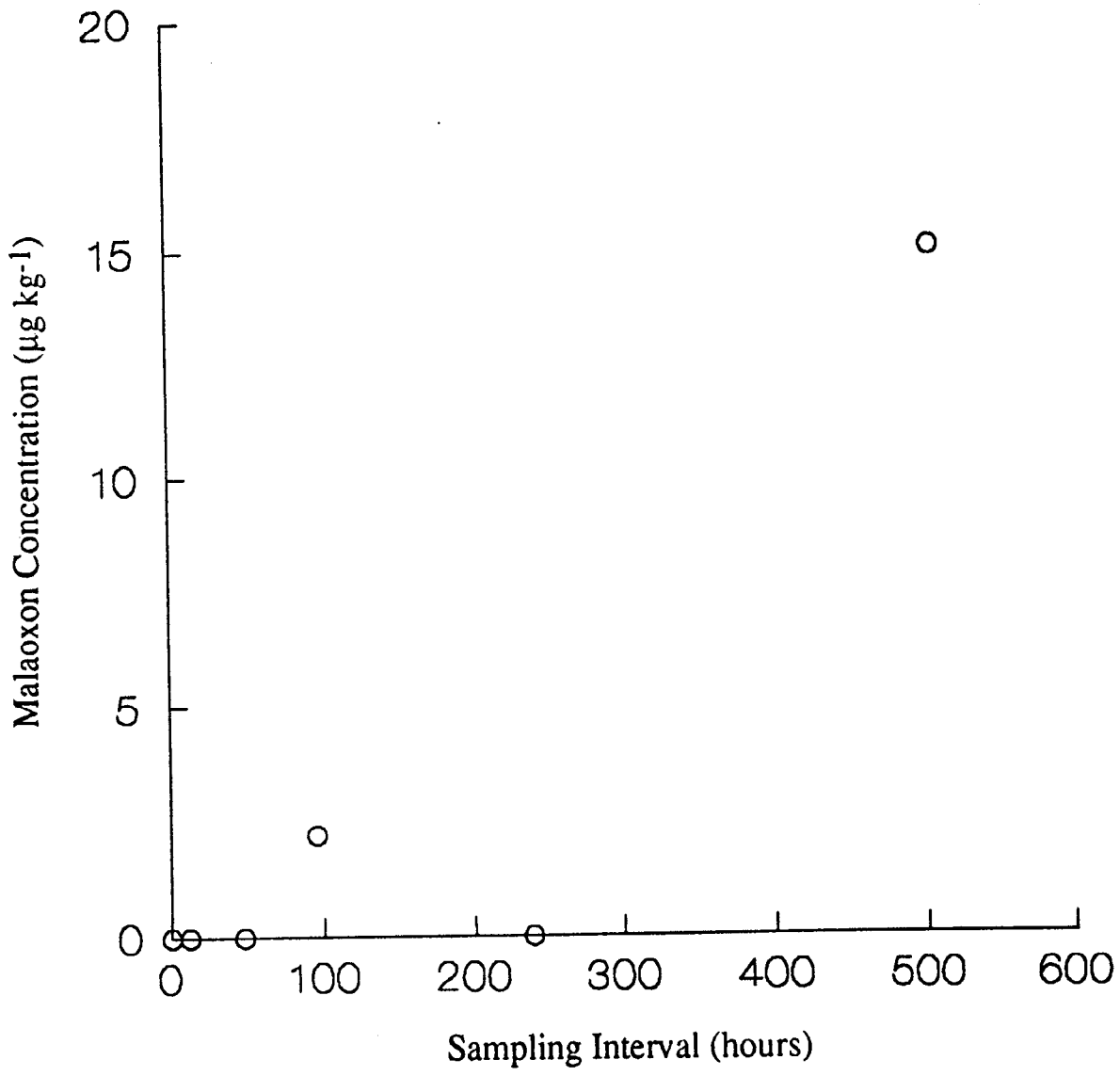

Figure 10. Malaoxon residue concentrations in tomato fruit over a 21-day period. Data points are mean values of four replicate samples.

Degradation of Malathion on Lettuce

The amount of dislodgeable malathion on lettuce declined very rapidly as compared to tomato fruit (Table 20). This decline may be attributed to ion exchange processes at the leaf surface which would be minimal on tomato fruit. The data were best fit by a double exponential decay function (Figure 11) which had an excellent data fit of R^2=0.9982 (Table 7). Because of the increase in size of the lettuce leaves over the sampling period, a 'dilution' of malathion could occur due to increase in leaf area and mass. In order to adjust for this increase in size, malathion concentrations were predicted on the basis of leaf area normalized to the 0 hr sample mean leaf size. These adjustments changed the predictions minimally, and demonstrated a similar decay curve with an R^2= 0.9853 (Figure 11). Predicted residues of malathion on leaves showed approximately 27% of the 0 hr values remaining after 12 hours, declining to 1% or less after 16 days (384 hr) (Table 21). It is important to note that due to senescence/death of the lettuce leaves, no samples were obtained after the 239 hr (10 day) sampling interval. Predictions based on the decay function demonstrated approximately 2.7% of original 0 hr concentration remaining at 10 days. Extrapolation to 20 days demonstrates a further decrease of only 2.2% and therefore the extrapolation of the data to longer periods is within reasonable limits based on actual data.

Unlike all other matrices, internal lettuce malathion concentration was best fit by a single exponential decay function (Figure 12, Table 22), rather than a double exponential function (Table 7). The fit of the data was still excellent (R^2=0.9873) and demonstrated a dramatic predicted decrease to 13% of the 0 hr value after 12 hr and 2.1 % after 2 days (48 hr) (Table 23). The predicted internal malathion concentrations were not estimated beyond 216 hrs because concentrations were lower than the minimum detection limits of the analytical laboratory. As was evident with dislodgeable concentrations on lettuce

Table 20. Concentration of dislodgeable malathion residues on lettuce leaf samples over a 10-day period.

Sampling Interval ------ hours ------	Reported Concentration -------- $\mu g\ cm^{-1}$--------		Leaf Surface Area -------- cm^2--------	
	Mean	SD*	Mean	SD
0	0.962	0.646	30.2	5.4
12	0.247	0.032	36.4	16.3
24	0.157	0.097	26.9	4.3
48	0.128	0.065	52.1	24.5
96	0.060	0.023	50.5	12.2
239	0.032	0.011	80.2	20.0

*SD = Standard Deviation

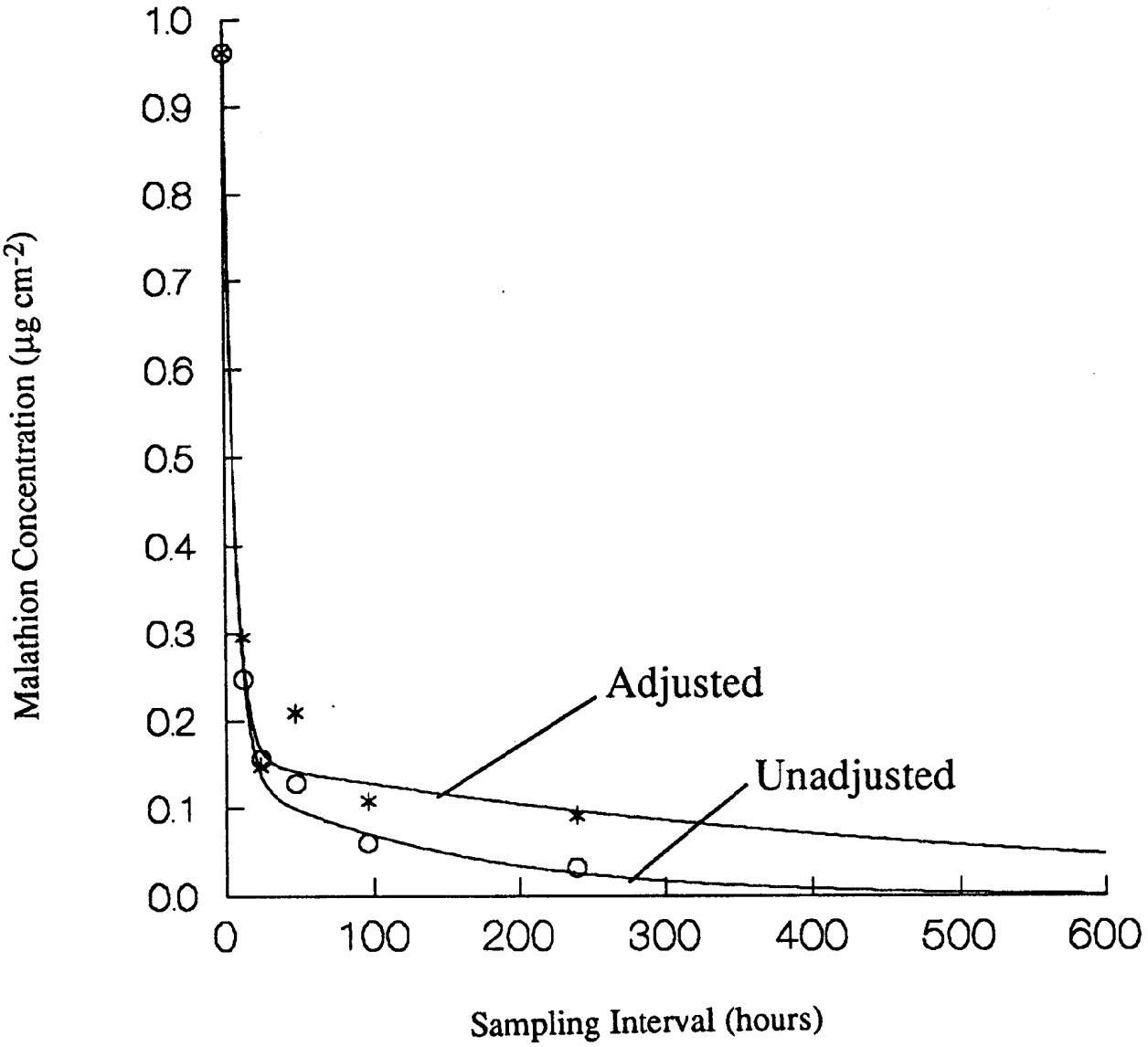

Figure 11. Double exponential decay of dislodgeable malathion residue concentrations on lettuce leaves over a 10-day period.

Unadjusted

$Y=0.138*EXP(-0.007*X) + 0.803*EXP(-0.150*X)$, $R^2 = 0.9982$.

Adjusted

$Y=0.156*EXP(-0.002*X) + 0.821*EXP(-0.157*X)$, $R^2 = 0.9853$.

Data points are mean values of four replicate samples.

Table 21. Predicted concentrations of dislodgeable malathion residues on letuce leaf samples over a 20-day period.

Days	Predicted Concentration[a]	Predicted Percentage[b] of 0 h Concentrations
	------ $\mu g\ cm^{-2}$ ------	-------- % --------
0.5	0.260	27.0
1	0.139	14.4
2	0.099	10.3
3	0.083	8.7
4	0.070	7.3
5	0.060	6.2
6	0.050	5.2
7	0.043	4.4
8	0.036	3.7
9	0.030	3.2
10	0.026	2.7
11	0.022	2.3
12	0.018	1.9
13	0.016	1.6
14	0.013	1.4
15	0.011	1.2
16	0.009	1.0
17	0.008	0.8
18	0.007	0.7
19	0.006	0.6
20	0.005	0.5

[a] Predicted concentrations based on a weighted double exponential decay regression.

[b] Predicted percentage of concentations compared to time 0 hours, i.e. immediate post-application samples.

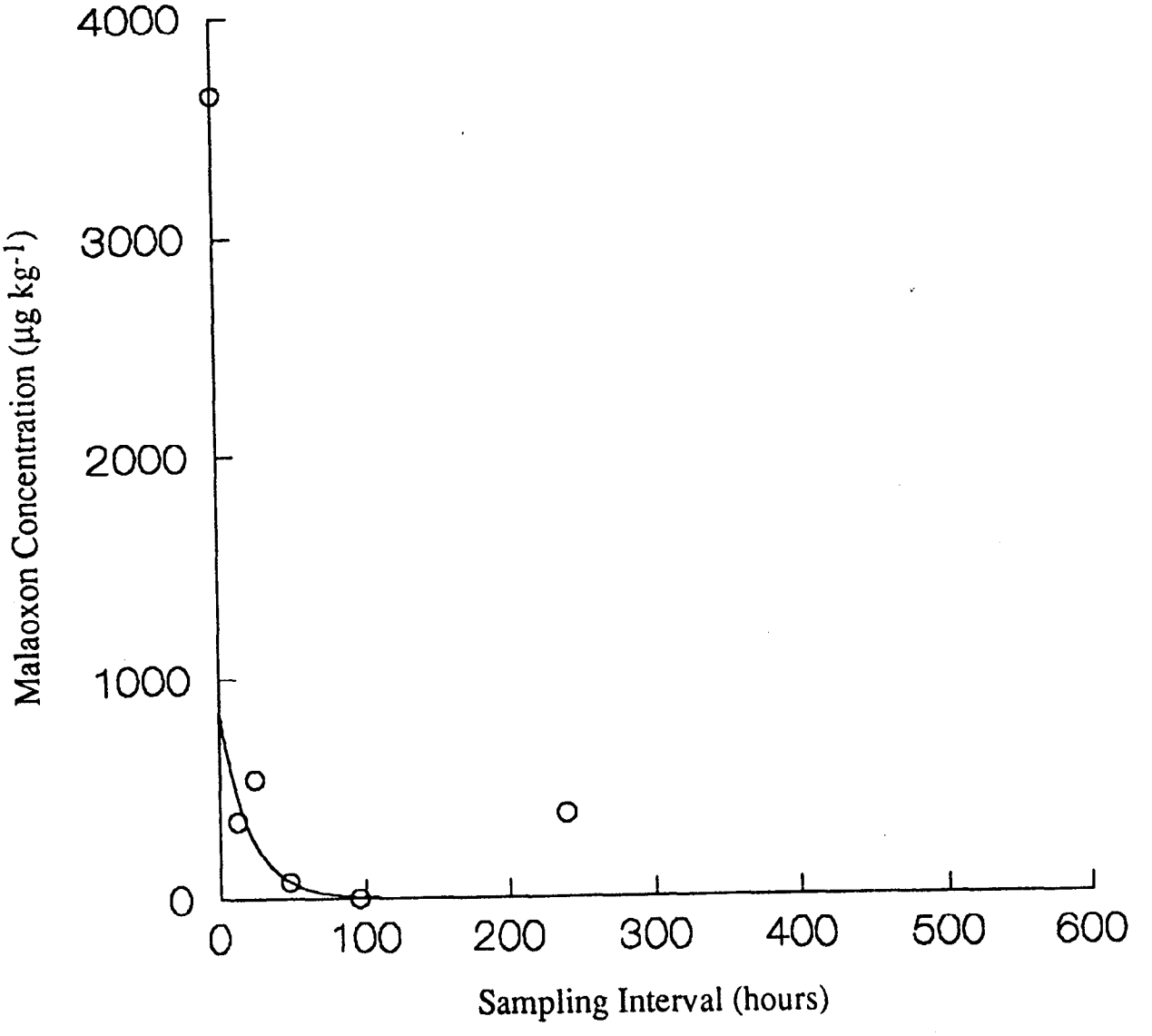

Figure 12. Exponential decay of malathion residue concentrations in lettuce leaves over a 10-day period. Y=848.595*EXP(-0.050*X), $R^2 = 0.9873$.Data points are mean values of four replicate samples.

Table 22. Concentration of malathion residues in lettuce leaf samples over a 10-day period.

Sampling Interval ------ hours ------	Reported Concentration -------- $\mu g\ kg^{-1}$--------		Leaf Weight -------- kg--------	
	Mean	SD*	Mean	SD
0	3643.5	1886.0	0.0009	0.0003
12	356.1	273.0	0.0011	0.0005
24	544.0	646.8	0.0005	0.0001
48	75.5	151.0	0.0013	0.0007
96	0.0	0.0	0.0013	0.0001
239	382.7	615.4	0.0021	0.0007

*SD = Standard Deviation

Table 23. Predicted concentrations of malathion residues in lettuce leaf samples over a 9-day period.

Days	Predicted Concentration[a]	Predicted Percentage[b] of 0 h Concentrations
	------ $\mu g\ kg^{-1}$ ------	-------- % --------
0.5	465.7	12.8
1	255.6	7.0
2	77.0	2.1
3	23.2	0.6
4	7.0	0.2
5	2.1	0.1
6	0.6	0.02
7	0.2	0.005
8	0.1	0.002
9	0.02	0.0005

[a] Predicted concentrations based on a weighted single exponential decay regression.

[b] Predicted percentage of concentations compared to time 0 hours, i.e. immediate post-application samples.

leaves, internal malathion concentrations dropped rapidly, possibly due to biodegradative processes occurring within the leaves.

Malaoxon was not detected at any time interval for lettuce leaves. Because of the extremely rapid degradation of malathion and theoretical interactions with detoxification pathways within the lettuce leaf, it is possible that the production of malaoxon was minimal or that malaoxon was also subject to biodegradation simultaneously with malathion.

Conclusions

The degradation rate of malathion on various matrices, from a single spray application, under these conditions of testing, was dependent on matrix type. Calculated half-lives demonstrate the influence of matrix type on persistence (Table 24). The rate of degradation in soil was much slower than sand, possibly due to the presence of a significant amount of organic matter which has been shown to affect pesticide fixation in soils (Saltzman et al., 1986). Supporting evidence for this binding of malathion is the lack of an organic fraction in the sand matrix and the observed more rapid degradation over time. For soil, the effective predicted time to 50% of initial concentration is less than 12 hours while the sand matrix effectively reduces the malathion concentration to 20% in less than 12 hours.

The degradation of malathion in the water matrix was extremely variable and did not show any definitive trends. The rate of hydrolysis in water has been shown to vary between a few hours to years (Wolfe et al., 1977). Reports documenting the degradation rate of malathion do not take into account the presence of the Nu-Lure® proteinaceous

Table 24. Predicted Half-Life of Malathion Concentration on Various Media.

Media	Time to 1/2 of Initial Observed Concentration*
Soil	8 hours
Sand	<1 hour
Tomato	97 hours
Tomato Internal	26 hours
Lettuce	6 hours
Lettuce Internal	<1 hour

*Times are rounded to the nearest whole hour.

bait in the water and it is not clear what the influence this bait has on hydrolysis of malathion in aqueous solutions.

The degradation of malathion on tomato fruit surfaces was quite slow, showing 50% of initial concentration still remaining after 4 days. Limited ion exchange and adsorption on tomato fruit may be responsible for longer residence times of the pesticide. Internal concentrations of malathion declined somewhat more rapidly with 50% of initial concentration was still present inside the fruit after one day.

Degradation of malathion on lettuce, both dislodgeable and internal, was extremely rapid. Only 27% of the initial dislodgeable concentration was present at 12 hours. Reduction of internal concentration of malathion was much more rapid, demonstrating approximately only 7% of initial concentration present at one day. The more rapid decline in malathion concentration is most likely due very active biodegradation by the lettuce leaf, possibly linked to ion exchange at the leaf surface and adsorption into the internal leaf surfaces.

Production of malaoxon was not evident on most matrices, with first occurrence demonstrated at 96 hours (4 days) after initial exposure on soil and tomato fruit (internal), and 239 hours (10 days) on sand. The lack of appearance of malaoxon may be due to the particular matrix itself or to other factors such as volatilization which was not addressed in this study.

An important aspect to be considered in reviewing the results reported here is that the spray mixture applied to the five matrices was different than that in the 1989-1990 CDFA Aerial Spray Eradication Program. The spray mixture used in these studies was modified to include 15% distilled water, by volume, and a final mixing ratio of ≈ 10,000:1 bait/malathion (v/v) in contrast to the aerial spray mixing ratio of 4:1 bait/malathion

(v/v). These changes were required to achieve atomization of the mixture and the target deposition rate of approximately 1980 $\mu g/ft^2$ attained in the aerial sprays. The change in the ratio caused much more bait to be applied per volume of malathion, resulting in a slurry rather than discrete droplets at the target matrix. Hydrolysis and volatilization of malathion may be dependent on the ratio of bait to pesticide so these results should be viewed cautiously when extrapolating these results to ambient conditions. It is recommended that a companion study be initiated to determine the relative effect of bait/malathion mixing ratio on degradation rates. If this information is obtained, it would be possible to accurately assess the utility of the results of malathion persistence and malaoxon production for risk assessment of future aerial spray eradication programs.

For future malathion degradation studies, time series models (Box and Jenkins, 1976) should be considered if they are appropriate for the goals of the study. When data are collected over time serial correlation of the errors is possible and could cause incorrect conclusions to be drawn in least squares analysis (Draper and Smith, 1981; Box, Hunter and Hunter, 1978). By taking observations at 40 or 50 equally spaced intervals over time and using the time series models to build the serial correlation into the model it would be possible to examine different aspects of malathion degradation than allowed by least squares methods. Time series models would be particularly useful for examination of the effect of temperature and humidity on malathion degradation or for modeling concentrations during multiple spray events.

References

British Crop Protection Council. 1977. Pesticide Manual, 5th Ed. M.H. Worthing (Ed). British Crop Protection Council, UK.

Box, G.E.P. and G.M. Jenkins. 1976. Time Series Analysis: Forecasting and Control. Holden-Day inc., San Francisco, CA.

California Department of Food and Agriculture. 1981. A characterization of sequential aerial malathion applications in the Santa Clara valley of California, 1981. Environmental Hazards Assessment Program, Department of Food and Agriculture, Sacramento, CA.

California Department of Food and Agriculture. 1991. Environmental monitoring of malathion aerial applications used to eradicate Mediterranean fruit flies in southern California, 1990. Environmental Hazards Assessment Program, Department of Food and Agriculture, Sacramento, CA.

California Department of Health Services. 1991. Malathion Risk Assessment.

Chiou, C.T., V.H. Freed, D.W. Schmedding, and R.L. Kohnert. 1989. Environ. Sci. Technol. 11:475-478.

Chukwudebe, A., R.B. March, M. Othman, and T.R. Fukuto. 1989. Formation of trialkyl phosphorothioate esters from organophosphorus insecticides after exposure to either ultraviolet light or sunlight. J. Agric. Food Chem. 37:539-45.

Farm Chemicals Handbook '92. 1992. Meister Publ. Co., Willoughby, OH.

Hartley, D. and H. Kidd (eds.) 1987. The Agrochemicals Handbook, 2nd Edition. Royal Society of Chemistry, UK.

Lin, P.T., A.R. Main, N. Motoyama, and W.C. Dauterman. 1983. Hydrolysis of malathion by rabbit liver oligomeric and monomeric carboxylesterases. Pestic. Biochem. Physiol. 20:232-237.

Miller Chemical and Fertilizer Corp. 1990. Product report for Nu-Lure® insect bait. P.O. Box 333, Radio Road, Hanover, Pennsylvania, 17331, USA.

Musselman, R.C., P.M. McCool, R.J. Oshima and R.R. Teso. 1986. Field chambers for assessing crop loss from air pollutants. J. Environ. Qual. 15:152-157.

Saltzman, S., L. Kliger and B. Yaron. Adsorption-desorption of parathion as affected by soil organic matter. 1986. In: Pesticides in Soil. S. Saltzman and B. Yaron, Eds. Van Nostrand Reinhold, Co. New York. pp. 22-24.

Spraying Systems Co. 1989. Spray Nozzles and Accessories. Spraying Systems Co., Wheaton, IL.

BMDP. 1990. BMDP Statistical Software Manual, Vol. 1. W.J. Dixon, ed. University of California Press, Berkeley.

Tsipriyan, V.I. and N.I. Martsenyuk. 1984. Toxicological evaluation of photolytic degradation products of pesticides. Gig. Sanit. 8:77-80.

Wolfe, N.L., R.G. Zepp, J.A. Jordan, G.L. Baughman, and D.M. Cline. 1977. Kinetics of chemical degradation of malathion in water. Environ. Sci. Technol. 11:88-93.

Appendices

Appendix A

Analytical Methods

Page

Extraction techniques and analysis methodology..... A-1

GC analysis for the determination of malathion &

malaoxon in various matrices..... A-4

Extraction Techniques & Analysis Methodology for CAL EPA Project 119 Malathion/Malaoxon Application Study

A) Water Matrix:

1) In a 2 liter seperatory funnel, extract a liter sample by shaking with 3 x 60 ml portions of methylene chloride.

2) Rotovap the combined extracts to dryness.

3) Exchange with 10 ml hexane for GC/NPD determination.

4) Extraction ratio 10ml/1000ml sample.

5) Quantitated with the equation:

$$\frac{\text{Height of sample peak}}{\text{Height of std peak}} \times \text{std conc } \mu g/ml \times \frac{10ml}{1000\ ml} \times \frac{1000ml}{L} =$$

Answer in µg/L

B) Soil Matrix

1) Extract 50 grams of sample and 50 grams of sodium sulfate by sonication with 3 x 100 ml portions of ethyl acetate for 7 minutes each.

2) Rotoevaporate the combined extracts to dryness.

3) Take up the solvent extract with 5 ml ethyl acetate.

4) Extraction ratio 5 ml extract/50 g sample.

5) Quantitated with the equation:

$$\frac{\text{Height of sample peak}}{\text{Height of std peak}} \times \text{std conc } \mu g/ml \times \frac{5ml}{50\ g} \times \frac{1000g}{kg} =$$

Answer in µg/kg

C) Jars

1) Measure 1,000 ml of deionized water. Rinse the entire contents of the sample jar by serially rinsing with 100 ml portions of D.I. water until the entire measured 1 liter of rinsate is depleted. These serial rinsates are combined into a 2 liter seperatory funnel.

2) Rinse the sample jar with 60 ml of methylene chloride and add this rinsate to the 2 liter seperatory funnel. Extract the water in the seperatory funnel with 60 ml of methylene chloride. Repeat rinsing the jar and extracting the water rinsate a total of three times. The combined rinsates are extracted with 3 x 60 ml methylene chloride. The sample jar is serially rinsed with this solvent to ensure complete transfer.

3) Rotovap the combined methylene chloride extracts to dryness and exchange into 10 ml hexane. Extraction ratio is 10 ml/jar sample. Extract is complete for GC/NPD determination.

4) Calculate with equation:

$$\frac{\text{Height of sample peak}}{\text{Height of std peak}} \times \text{std conc } \mu g/ml \times \frac{10ml}{\text{sample jar}} =$$

Answer in µg/sample jar

D) Vegetable Matrix (Dislodgeables):

1) Extract entire sample (i.e. all tomatoes or lettuce and jar rinse from the sample) with 3 x 400 ml D.I. water with 3 drops SUR-TEN surfactant. These three rinsates are combined with an additional 100 ml D.I. water into a 2 liter seperatory funnel.

2) Extract the above rinsate (approximately 1200 ml) with 3 x 100 ml methylene chloride.

3) Rotovap the extract to dryness and exchange into 10 ml hexane for GC/NPD determination.

4) Extraction ratio 10ml/sample (cm^2) surface area.

5) Calculate with equation:

$$\frac{\text{Height of sample peak}}{\text{Height of std peak}} \times \text{std conc } \mu g/ml \times \frac{10ml}{\text{sample}} =$$

Answer in µg/sample cm^2*

* Converted to $\mu g/cm^2$ by summing the surface area of the entire sample extracted.

D2) Vegetable Matrix (Total or interior residue):

1) Extract entire lettuce leaf or 1 tomato. The tomato is cut into several pieces for ease of extraction. Record sample weight for quantitation.

2) The tomato is extracted with 200 ml acetonitrile and blended with Omni mixer for 3 minutes. The lettuce leaf is extracted with 100 ml acetonitrile.

3) The blended extract is then filtered through a Whatman #41 filter disk and collected into a boiling flask.

4) The extract is then rotovaped to dryness and exchanged into 5 ml ethyl acetate for GC/NPD determination.

5) Calculate with the equation:

$$\frac{\text{Height of sample peak}}{\text{Height of std peak}} \times \underset{\mu g/ml}{\text{std conc}} \times \frac{5ml}{\text{wt of sample}} \times \frac{1000g}{kg} =$$

Answer in µg/kg internal residue

E) Tank Mix Matrix:

1) Place 1 ml sample aliquot into 1 liter D.I. water and shake thoroughly.

2) Extract above solution 3 x with 60 ml methylene chloride.

3) Rotovap the combined extracts to dryness.

4) Exchange with 10 ml hexand for GC/NPD determination.

5) Quantitate with the equation:

$$\frac{\text{Height of sample peak}}{\text{Height of std peak}} \times \underset{\mu g/ml}{\text{std conc}} \times \frac{10ml}{1000ml} \times \frac{1000ml}{L} =$$

Answer in µg/L

G.C. ANALYSIS FOR THE DETERMINATION OF MALATHION & MALAOXON IN VARIOUS MATRICES FOR CAL EPA PROJECT 119

1. 5890 Hewlett/Packard gas chromatograph equipped with dual NPD detectors and 7673 A auto injectors. Intergration through HP 3392A integrators.

2. RTX-35 column .53mm I.D. x 30 meters - Restek Column (Primary)
   DB-5 column .53mm I.D. x 30 meters - J & W Column (Confirmation)

3. Temperature Program:

Equilibration Time:	2.0 min
Initial Temp:	100 °C
Initial Time:	4.0 min
Temp Ramp:	10.0 °C
Final Temp:	280 °C
Final Time:	8 min
Injector Temp:	200 °C
Detector Temp:	325 °C
Run Time:	30 min

4. 3 ml injection size.

5. Integrator parameters:

zero	= 10
attenuation	= 6
chart speed	= 0.1 cm/min
peak width	= 0.04
threshold	= 4

Appendix B

Field Samples - Raw Data

	Page
Spray Jars	B-1
Sand Samples	B-2
Soil Samples	B-3
Water Samples	B-4
Tomato Samples	B-5
Lettuce Samples	B-6
Sample Tracking	B-7

Malathion Monitoring Project #119, 1992						
Matrix : Spray Jars						
COC & Sample #	Sample/Spike	Sample Interval Hour	Sample Date	Mass of Jar g	Mass of Jar Post-Spray g	Mass of Spray g
100	100 µg spike	0	6/15/92	145.97	146.85	0.88
118	sample	0	6/15/92	145.57	146.40	0.83
119	sample	0	6/15/92	149.72	149.94	0.22
120	sample	0	6/15/92	145.50	145.83	0.33
121	sample	0	6/15/92	145.44	145.93	0.49
122	sample	0	6/15/92	145.88	146.18	0.30
123	sample	0	6/15/92	149.67	149.98	0.31
124	sample	0	6/15/92	145.70	148.12	2.42
125	sample	0	6/15/92	149.74	151.00	1.26
126	sample	0	6/15/92	149.57	150.98	1.41
127	sample	0	6/15/92	149.63	152.28	2.65
128	sample	0	6/15/92	148.15	148.91	0.76
129	sample	0	6/15/92	148.29	149.16	0.87
130	sample	0	6/15/92	149.69	150.73	1.04
131	sample	0	6/15/92	147.95	148.76	0.81
132	sample	0	6/15/92	148.03	149.90	1.87
133	sample	0	6/15/92	148.23	148.47	0.24
134	sample	0	6/15/92	148.03	150.04	2.01
135	sample	0	6/15/92	148.22	148.52	0.30
136	sample	0	6/15/92	148.04	148.29	0.25
137	sample	0	6/15/92	148.67	153.91	5.24
138	sample	0	6/15/92	148.34	149.09	0.75
139	sample	0	6/15/92	148.12	148.89	0.77
193	50 µg spike	48	6/17/92	146.68	147.54	0.86
257	25 µg spike	504	7/6/92	146.79	147.67	0.88

Malathion Monitoring Project #119, 1992						
Matrix : Sand						
COC & Sample #	Sample/Spike	Sample Interval Hour	Sample Date	Mass of Jar & 50g Sand g	Mass of Jar Post-Spray g	Mass of Spray g
102	100 µg spike	0	6/15/92	199.65	200.53	0.88
141	sample	0	6/15/92	198.22	199.75	1.53
143	sample	0	6/15/92	198.30	198.61	0.31
144	sample	0	6/15/92	198.20	200.33	2.13
146	sample	0	6/15/92	197.95	198.69	0.74
149	sample	12	6/16/92	195.88	196.75	0.87
151	sample	12	6/16/92	196.97	197.16	0.19
153	sample	12	6/16/92	197.19	197.32	0.13
155	sample	12	6/16/92	199.69	199.77	0.08
169	sample	24	6/16/92	199.46	199.54	0.08
171	sample	24	6/16/92	197.19	197.22	0.03
173	sample	24	6/16/92	197.11	197.84	0.73
175	sample	24	6/16/92	196.51	196.82	0.31
191	50 µg spike	48	6/17/92	198.00	198.88	0.88
199	sample	48	6/17/92	199.52	199.71	0.19
201	sample	48	6/17/92	199.77	200.22	0.45
203	sample	48	6/17/92	195.94	196.05	0.11
205	sample	48	6/17/92	199.61	199.65	0.04
214	sample	96	6/19/92	196.74	196.77	0.03
217	sample	96	6/19/92	197.00	197.12	0.12
219	sample	96	6/19/92	195.47	195.75	0.28
221	sample	96	6/19/92	195.46	195.74	0.28
236	sample	239	6/25/92	199.53	199.68	0.15
238	sample	239	6/25/92	195.32	195.38	0.06
240	sample	239	6/25/92	199.69	199.79	0.10
242	sample	239	6/25/92	195.64	195.82	0.18
259	25 µg spike	504	7/6/92	196.98	197.84	0.86
262	sample	504	7/6/92	185.96	185.97	0.01
264	sample	504	7/6/92	195.96	196.03	0.07
266	sample	504	7/6/92	199.71	200.00	0.29
268	sample	504	7/6/92	196.04	196.06	0.02

Malathion Monitoring Project #119, 1992						
Matrix : Soil						
COC & Sample #	Sample/Spike	Sample Interval Hour	Sample Date	Mass of Jar & 50g Soil g	Mass of Jar Post-Spray g	Mass of Spray g
101	100 µg spike	0	6/15/92	195.45	196.29	0.84
140	sample	0	6/15/92	196.67	197.78	1.11
142	sample	0	6/15/92	196.57	197.07	0.50
145	sample	0	6/15/92	196.91	198.49	1.58
147	sample	0	6/15/92	196.82	197.05	0.23
148	sample	12	6/16/92	195.49	195.61	0.12
150	sample	12	6/16/92	195.57	195.73	0.16
152	sample	12	6/16/92	199.76	200.07	0.31
154	sample	12	6/16/92	196.26	196.68	0.42
168	sample	24	6/16/92	199.70	199.87	0.17
170	sample	24	6/16/92	195.77	195.87	0.10
172	sample	24	6/16/92	196.05	196.27	0.22
174	sample	24	6/16/92	199.65	199.75	0.10
192	50 µg spike	48	6/17/92	196.95	197.82	0.87
198	sample	48	6/17/92	199.52	199.71	0.19
200	sample	48	6/17/92	199.77	200.22	0.45
202	sample	48	6/17/92	195.94	196.05	0.11
204	sample	48	6/17/92	199.61	199.65	0.04
214	sample	96	6/19/92	196.74	196.77	0.03
217	sample	96	6/19/92	197.00	197.12	0.12
219	sample	96	6/19/92	195.47	195.75	0.28
221	sample	96	6/19/92	195.46	195.74	0.28
236	sample	239	6/25/92	199.53	199.68	0.15
238	sample	239	6/25/92	195.32	195.38	0.06
240	sample	239	6/25/92	199.69	199.79	0.10
242	sample	239	6/25/92	195.64	195.82	0.18
259	25 µg spike	504	7/6/92	196.98	197.84	0.86
262	sample	504	7/6/92	185.97	185.98	0.01
264	sample	504	7/6/92	195.96	196.03	0.07
266	sample	504	7/6/92	199.71	200.00	0.29
268	sample	504	7/6/92	196.04	196.06	0.02

Malathion Monitoring Project #119, 1992

Matrix : Water

COC & Sample #	Sample/Spike	Sample Interval Hour	Sample Date	Mass of Bottle g	Mass of Bottle & Water g	Mass of Water g	pH	Temp. °C
103	1000 µg spike	0	6/15/92	400.78	1267.10	866.32	5.20	20.0
114	sample	0	6/15/92	399.69	1125.00	725.31	6.16	19.3
115	sample	0	6/15/92	399.51	1092.40	692.89	5.75	19.5
116	sample	0	6/15/92	399.91	1176.10	776.19	5.36	19.2
117	sample	0	6/15/92	400.73	1137.40	736.67	4.64	19.3
156	sample	12	6/16/92	400.94	1190.10	789.16	5.06	17.3
157	sample	12	6/16/92	399.73	1206.20	806.47	4.77	19.1
158	sample	12	6/16/92	399.55	1180.70	781.15	4.37	20.9
159	sample	12	6/16/92	400.87	1190.30	789.43	4.39	17.4
176	sample	24	6/16/92	399.67	1155.50	755.83	7.57	26.0
177	sample	24	6/16/92	398.13	1186.10	787.97	4.52	27.0
178	sample	24	6/16/92	399.81	1119.70	719.89	5.51	27.3
179	sample	24	6/16/92	399.19	1158.00	758.81	7.53	28.6
190	500 µg spike	48	6/17/92	399.97	1253.40	853.43	5.35	29.5
210	sample	48	6/17/92	398.60	1254.50	855.90	7.24	31.0
211	sample	48	6/17/92	398.31	1231.70	833.39	6.86	29.7
212	sample	48	6/17/92	400.41	1211.00	810.59	4.59	29.1
213	sample	48	6/17/92	399.88	1166.90	767.02	5.32	29.5
222	sample	96	6/19/92	399.07	1082.80	683.73	6.94	32.6
223	sample	96	6/19/92	399.64	1227.60	827.96	5.95	33.8
224	sample	96	6/19/92	399.18	1109.00	709.82	7.14	32.2
225	sample	96	6/19/92	399.17	1022.50	623.33	5.34	32.2
243	sample	239	6/25/92	399.15	1131.20	732.05	8.05	32.8
244	sample	239	6/25/92	400.59	939.70	539.11	7.97	30.3
245	sample	239	6/25/92	395.55	1205.80	810.25	7.92	32.4
246	sample	239	6/25/92	396.70	1292.40	895.70	7.59	32.6
260	250 µg spike	504	7/6/92	397.78	1247.30	849.52	5.50	30.1
269	sample	504	7/6/92	396.58	1088.50	691.92	9.53	33.8
270	sample	504	7/6/92	397.06	799.98	402.92	9.45	31.0
271	sample	504	7/6/92	397.11	1144.80	747.69	9.13	33.0
272	sample	504	7/6/92	399.02	1209.90	810.88	7.91	35.1

Tomato Data

Malathion Monitoring Project #119, 1992

Matrix : Tomato Fruit

COC & Sample #	Sample/Spike	Sample Interval Hour	Sample Date	Mass of Jar g	Mass of Bottle & Fruit g	Mass of Fruit g	Fruit #1 Horizontal Diameter cm	Fruit #1 Stem to Flower Diameter cm	Fruit #1 Surface Area cm^2	Fruit #2 Horizontal Diameter cm	Fruit #2 Stem to Flower Diameter cm	Fruit #2 Surface Area cm^2
104	300 µg spike	0	6/15/92	456.75	602.80	146.05	5.184	5.225	85.096	4.626	5.148	75.030
110	sample	0	6/15/92	453.13	625.33	172.20	5.906	6.420	119.326	6.160	19.300	509.104
111	sample	0	6/15/92	457.77	692.20	234.43	5.751	5.410	97.835	6.404	6.285	126.458
112	sample	0	6/15/92	447.34	738.42	291.08	7.278	6.631	151.943	7.401	5.878	138.491
113	sample	0	6/15/92	452.40	741.15	288.75	6.753	6.319	134.207	7.363	6.333	147.325
160	sample	12	6/16/92	461.35	727.74	266.39	5.879	5.339	98.837	6.863	6.017	130.293
161	sample	12	6/16/92	421.35	649.21	227.86	6.608	6.026	125.364	5.517	5.177	89.819
162	sample	12	6/16/92	419.60	629.22	209.62	6.470	5.481	112.176	5.221	4.694	77.210
163	sample	12	6/16/92	420.02	597.43	177.41	5.527	4.555	79.833	5.922	5.439	101.373
184	sample	24	6/16/92	455.69	626.85	171.16	5.302	5.262	87.649	5.343	5.258	88.264
185	sample	24	6/16/92	451.02	670.27	219.25	6.021	5.052	96.299	5.838	5.120	94.309
186	sample	24	6/16/92	453.23	688.68	235.45	6.558	5.189	108.379	5.785	6.215	113.097
187	sample	24	6/16/92	454.77	651.27	196.50	6.055	5.418	103.382	5.642	5.227	92.783
188	150 µg spike	48	6/17/92	456.40	647.17	190.77	5.768	4.792	87.583	6.167	5.713	110.847
194	sample	48	6/17/92	457.78	635.28	177.50	5.688	5.425	96.996	5.652	5.437	96.577
195	sample	48	6/17/92	456.24	679.46	223.22	6.133	5.757	111.033	5.723	5.902	106.139
196	sample	48	6/17/92	457.79	728.63	270.84	6.502	5.817	119.190	6.872	6.133	132.834
197	sample	48	6/17/92	419.64	653.72	234.08	6.473	5.772	117.763	6.165	5.359	104.303
226	sample	96	6/19/92	442.86	768.19	325.33	7.445	5.054	122.699	6.849	5.836	126.378
227	sample	96	6/19/92	449.07	563.45	114.38	4.257	4.531	60.655	5.190	5.157	84.085
228	sample	96	6/19/92	447.00	732.42	285.42	5.770	5.679	102.950	7.409	6.018	141.595
229	sample	96	6/19/92	445.45	706.22	260.77	6.131	6.000	115.580	6.941	5.853	128.559
247	sample	239	6/25/92	450.77	692.66	241.89	6.019	5.165	98.239	6.342	5.600	112.007
248	sample	239	6/25/92	444.33	607.31	162.98	5.215	5.566	91.287	5.944	5.585	104.393
249	sample	239	6/25/92	451.90	661.79	209.89	6.642	5.324	112.457	5.739	5.239	94.653
250	sample	239	6/25/92	443.23	604.02	160.79	5.679	5.514	98.397	5.119	4.770	76.806
256	75 µg spike	504	7/6/92	451.00	559.26	108.26	4.403	4.652	64.397	4.849	4.757	72.473
273	sample	504	7/6/92	448.29	682.23	233.94	5.822	5.955	108.933	6.188	5.690	110.809
274	sample	504	7/6/92	456.36	608.75	152.39	5.111	5.209	83.647	5.025	5.713	90.560
275	sample	504	7/6/92	443.18	600.67	157.49	5.857	4.922	91.253	4.989	4.855	76.108
276	sample	504	7/6/92	458.23	745.77	287.54	6.333	5.718	114.061	6.590	5.974	123.978

Lettuce Data

Malathion Monitoring Project #119, 1992

Matrix : Lettuce Leaves

COC & Sample #	Sample/Spike	Sample Interval Hour	Sample Date	Mass of Jar g	Mass of Bottle & Leaves g	Mass of Leaves g	Leaf #1 Surface Area cm^2	Leaf #2 Surface Area cm^2	Leaf #3 Surface Area cm^2	Leaf #4 Surface Area cm^2
105	100 µg spike	0	6/15/92	456.69	457.80	1.11	8.96	5.52	2.74	2.69
106	sample	0	6/15/92	454.18	455.58	1.40	15.41	20.43		
107	sample	0	6/15/92	448.48	449.25	0.77	18.29	14.35		
108	sample	0	6/15/92	443.52	444.29	0.77	16.06	12.80		
109	sample	0	6/15/92	452.97	453.69	0.72	12.49	10.85		
164	sample	12	6/16/92	421.47	422.97	1.50	14.96	13.97		
165	sample	12	6/16/92	421.44	422.11	0.67	14.96	11.00		
166	sample	12	6/16/92	421.93	422.59	0.66	14.96	11.00		
167	sample	12	6/16/92	421.33	422.87	1.54	28.47	32.25		
180	sample	24	6/16/92	456.15	456.54	0.39	12.52	11.81		
181	sample	24	6/16/92	458.44	458.95	0.51	12.57	13.14		
182	sample	24	6/16/92	457.07	457.74	0.67	17.14	16.41		
183	sample	24	6/16/92	452.56	453.06	0.50	10.31	14.06		
189	50 µg spike	48	6/17/92	448.46	450.02	1.56	17.03	11.48	11.61	
206	sample	48	6/17/92	450.73	452.55	1.82	35.94	37.10		
207	sample	48	6/17/92	448.99	449.67	0.68	16.58	16.77		
208	sample	48	6/17/92	420.93	421.55	0.62	14.52	13.98		
209	sample	48	6/17/92	447.82	449.64	1.82	38.71	34.77		
230	sample	96	6/19/92	443.52	444.99	1.47	27.45	36.37		
231	sample	96	6/19/92	448.56	449.76	1.20	26.52	18.24		
232	sample	96	6/19/92	443.25	444.52	1.27	26.12	30.64		
233	sample	96	6/19/92	446.42	447.64	1.22	17.91	18.63		
251	sample	239	6/25/92	444.70	445.95	1.25	29.25	26.42		
252	sample	239	6/25/92	450.51	453.33	2.82	36.87	65.09		
253	sample	239	6/25/92	448.82	451.28	2.46	50.52	38.83		
254	sample	239	6/25/92	455.27	456.94	1.67	50.27	23.27		
255	25 µg spike	504	7/6/92	448.05	451.00	2.95	40.81	33.04		

California Department of Pesticide Regulation / Environmental Hazards Assessment Program

CSUFresno

Sample Tracking

Stud No.	EHAP No.	Samp code	Lab No.	Date Collected	Date Delivered	Log In	Samp Type	Date Due	Lab	Date Extracted	Date Analyzed	Mala-thion	Mala-oxon	Report Units		Comment / Method / Blind Spike Recovery	Parent MDL	Oxon MDL	QC Report #
119	77		76987	5/21/92	5/22/92	ta	soi	6/8/92	appl			not analyzed				extracted only			
119	78		76989	5/21/92	5/22/92	ta	san	6/8/92	appl			not analyzed				extracted only			
119	79		76988	5/21/92	5/22/92	ta	soi	6/8/92	appl			not analyzed				extracted only			
119	80		76990	5/21/92	5/22/92	ta	san	6/8/92	appl			not analyzed				extracted only			
119	Day	0	76586	5/15/92			wat		appl	5/15/92	5/15/92	662.6		ug/l		Dissipation study			
119	Day	0	76587	5/15/92			wat		appl	5/15/92	5/15/92	650.2		ug/l		Dissipation study			
119	Day	0	76588	5/15/92			wat		appl	5/15/92	5/15/92	514.8		ug/l		Dissipation study			
119	Day	0	BLANK	5/15/92			wat		appl	5/15/92	5/15/92	4.2		ug/l		Dissipation study			
119	Day	4	76589	5/15/92			wat		appl	5/19/92	5/19/92	750.0		ug/l		Dissipation study			
119	Day	4	76590	5/15/92			wat		appl	5/19/92	5/19/92	715.9		ug/l		Dissipation study			
119	Day	4	76591	5/15/92			wat		appl	5/19/92	5/19/92	675.4		ug/l		Dissipation study			
119	Day	4	BLANK	5/15/92			wat		appl	5/19/92	5/19/92	13.4		ug/l		Dissipation study			
119	Day	7	76592	5/15/92			wat		appl	5/19/92	5/22/92	651.8		ug/l		Dissipation study			
119	Day	7	76593	5/15/92			wat		appl	5/19/92	5/22/92	652.8		ug/l		Dissipation study			
119	Day	7	76594	5/15/92			wat		appl	5/19/92	5/22/92	568.0		ug/l		Dissipation study			
119	Day	7	BLANK	5/15/92			wat		appl	5/19/92	5/22/92	0.6		ug/l		Dissipation study			
119	Day	11	76595	5/15/92			wat		appl	5/19/92	5/26/92	695.0		ug/l		Dissipation study			
119	Day	11	76596	5/15/92			wat		appl	5/19/92	5/26/92	577.5		ug/l		Dissipation study			
119	Day	11	76597	5/15/92			wat		appl	5/19/92	5/26/92	552.2		ug/l		Dissipation study			
119	Day	11	BLANK	5/15/92			wat		appl	5/19/92	5/26/92	3.2		ug/l		Dissipation study			
119	Day	14	76598	5/15/92			wat		appl	5/19/92	5/29/92	847.2		ug/l		Dissipation study			
119	Day	14	76599	5/15/92			wat		appl	5/19/92	5/29/92	817.4		ug/l		Dissipation study			
119	Day	14	76600	5/15/92			wat		appl	5/19/92	5/29/92	768.1		ug/l		Dissipation study			
119	Day	14	BLANK	5/15/92			wat		appl	5/19/92	5/29/92	2.7		ug/l		Dissipation study			
119	81		77508	6/01/92	6/03/92	cg	jar	6/5/92	appl	6/4/92	6/5/92	31.9		ug/jar		2nd nozzle calib	0.1		
119	82		77509	6/01/92	6/03/92	cg	jar	6/5/92	appl	6/4/92	6/5/92	38.2		ug/jar		2nd nozzle calib	0.1		
119	83		77510	6/01/92	6/03/92	cg	jar	6/5/92	appl	6/4/92	6/5/92	43.8		ug/jar		2nd nozzle calib	0.1		
119	84		77511	6/01/92	6/03/92	cg	jar	6/5/92	appl	6/4/92	6/5/92	20.4		ug/jar		2nd nozzle calib	0.1		
119	85		77512	6/01/92	6/03/92	cg	jar	6/5/92	appl	6/4/92	6/5/92	22.9		ug/jar		2nd nozzle calib	0.1		
119	86		77513	6/01/92	6/03/92	cg	jar	6/5/92	appl	6/4/92	6/5/92	32.1		ug/jar		2nd nozzle calib	0.1		
119	87		77514	6/01/92	6/03/92	cg	jar	6/5/92	appl	6/4/92	6/5/92	61.3		ug/jar		2nd nozzle calib	0.1		
119	88		77515	6/01/92	6/03/92	cg	jar	6/5/92	appl	6/4/92	6/5/92	42.5		ug/jar		2nd nozzle calib	0.1		
119	89		77516	6/01/92	6/03/92	cg	jar	6/5/92	appl	6/4/92	6/5/92	90.8		ug/jar		2nd nozzle calib	0.1		
119	90		77517	6/01/92	6/03/92	cg	jar	6/5/92	appl	6/4/92	6/5/92	59.8		ug/jar		2nd nozzle calib	0.1		
119	91		77518	6/01/92	6/03/92	cg	jar	6/5/92	appl	6/4/92	6/5/92	40.1		ug/jar		2nd nozzle calib	0.1		
119	92		77519	6/01/92	6/03/92	cg	jar	6/5/92	appl	6/4/92	6/5/92	56.8		ug/jar		2nd nozzle calib	0.1		
119	100	S	78175	6/15/92	6/17/92	cg	jar	6/24/92	appl	6/22/92	6/25/92	96.4	nd	ug/jar		spiked @100ug	10ug	20ug	4
119	101	S	78157	6/15/92	6/17/92	cg	soi	7/8/92	appl	6/23/92	6/27/92	2500	nd	ug/kg		spiked @100ug	100ug/kg	200ug/kg	6

California Department of Pesticide Regulation / Environmental Hazards Assessment Program

Sample Tracking

CSUFresno

Stud No.	EHAP No.	Samp code	Lab No.	Date Collected	Date Delivered	Log In	Samp Type	Date Due	Lab	Date Extracted	Date Analyzed	Mala-thion	Mala-oxon	Report Units		Comment / Method / Blind Spike Recovery	Parent MDL	Oxon MDL	QC Report #
119	102	S	78166	6/15/92	6/17/92	cg	san	7/8/92	appl	6/23/92	6/27/92	2000	nd	ug/kg		spiked @100ug	100ug/kg	200ug/kg	6
119	103	S	78148	6/15/92	6/17/92	cg	wat	7/8/92	appl	6/19/92	6/19/92	706	nd	ug/l		spiked @1000ug	58ug/l	100ug/l	3
119	104	S	78112	6/15/92	6/17/92	cg	tom	7/8/92	appl	6/17/92	6/23/92	425	nd	ug/160.1cm2	Dis	spiked @300ug	25ug	50ug	1
119	104		78130	6/15/92	6/17/92	cg	tom	7/8/92	appl	6/17/92	6/23/92	239	nd	ug/kg	Int		3.2ug/kg	6.4ug/kg	1
119	105	S	78121	6/15/92	6/17/92	cg	let	7/8/92	appl	6/17/92	6/20/92	108	nd	ug/19.9cm2	Dis	spiked @100ug	5.0ug	10.0ug	1
119	105		78139	6/15/92	6/17/92	cg	let	7/8/92	appl	6/17/92	6/27/92	1617	nd	ug/kg	Int		225ug/kg	450ug/kg	1
119	106		78122	6/15/92	6/17/92	cg	let	7/8/92	appl	6/17/92	6/20/92	50.5	nd	ug/35.8cm2	Dis	Application	5.0ug	10.0ug	1
119	106		78140	6/15/92	6/17/92	cg	let	7/8/92	appl	6/17/92	6/27/92	3052	nd	ug/kg	Int	Application	179ug/kg	350ug/kg	1
119	107		78123	6/15/92	6/17/92	cg	let	7/8/92	appl	6/17/92	6/20/92	52.9	nd	ug/32.6cm2	Dis	Application	5.0ug	10.0ug	1
119	107		78141	6/15/92	6/17/92	cg	let	7/8/92	appl	6/17/92	6/27/92	6064	nd	ug/kg	Int	Application	325ug/kg	650ug/kg	1
119	108		78124	6/15/92	6/17/92	cg	let	7/8/92	appl	6/17/92	6/20/92	11.4	nd	ug/28.9cm2	Dis	Application	5.0ug	10.0ug	1
119	108		78142	6/15/92	6/17/92	cg	let	7/8/92	appl	6/17/92	6/27/92	1548	nd	ug/kg	Int	Application	325ug/kg	650ug/kg	1
119	109		78125	6/15/92	6/17/92	cg	let	7/8/92	appl	6/17/92	6/20/92	9.8	nd	ug/23.3cm2	Dis	Application	5.0ug	10.0ug	1
119	109		78143	6/15/92	6/17/92	cg	let	7/8/92	appl	6/17/92	6/27/92	3910	nd	ug/kg	Int	Application	350ug/kg	700ug/kg	1
119	110		78113	6/15/92	6/17/92	cg	tom	7/8/92	appl	6/17/92	6/19/92	19.4	nd	ug/194.4cm2	Dis	Application	5.0ug	10.0ug	1
119	110		78131	6/15/92	6/17/92	cg	tom	7/8/92	appl	6/17/92	6/26/92	46.8	nd	ug/kg	Int	Application	2.1ug/kg	4.1ug/kg	1
119	111		78114	6/15/92	6/17/92	cg	tom	7/8/92	appl	6/17/92	6/19/92	7.6	nd	ug/224.3cm2	Dis	Application	5.0ug	10.0ug	1
119	111		78132	6/15/92	6/17/92	cg	tom	7/8/92	appl	6/17/92	6/26/92	90.4	nd	ug/kg	Int	Application	1.9ug/kg	3.7ug/kg	1
119	112		78115	6/15/92	6/17/92	cg	tom	7/8/92	appl	6/17/92	6/20/92	115	nd	ug/290.4cm2	Dis	Application	5.0ug	10.0ug	1
119	112		78133	6/15/92	6/17/92	cg	tom	7/8/92	appl	6/17/92	6/26/92	103	14.3	ug/kg	Int	Application	1.7ug/kg	3.4ug/kg	1
119	113		78116	6/15/92	6/17/92	cg	tom	7/8/92	appl	6/17/92	6/20/92	41.6	nd	ug/281.5cm2	Dis	Application	5.0ug	10.0ug	1
119	113		78134	6/15/92	6/17/92	cg	tom	7/8/92	appl	6/17/92	6/26/92	71.9	nd	ug/kg	Int	Application	1.8ug/kg	3.6ug/kg	1
119	114		78149	6/15/92	6/17/92	cg	wat	7/8/92	appl	6/19/92	6/19/92	360	nd	ug/l		Application	6.9ug/l	6.9ug/l	3
119	115		78150	6/15/92	6/17/92	cg	wat	7/8/92	appl	6/19/92	6/19/92	470	nd	ug/l		Application	2.5ug/l	5.0ug/l	3
119	116		78151	6/15/92	6/17/92	cg	wat	7/8/92	appl	6/19/92	6/19/92	590	nd	ug/l		Application	2.5ug/l	5.0ug/l	3
119	117		78152	6/15/92	6/17/92	cg	wat	7/8/92	appl	6/19/92	6/19/92	1250	nd	ug/l		Application	68ug/l	136ug/l	3
119	118		78176	6/15/92	6/17/92	cg	jar	7/8/92	appl	6/22/92	6/26/92	100	nd	ug/jar		spray #3	10.0ug	20.0ug	4
119	119		78177	6/15/92	6/17/92	cg	jar	7/8/92	appl	6/22/92	6/26/92	26.8	nd	ug/jar		spray #3	10.0ug	20.0ug	4
119	120		78178	6/15/92	6/17/92	cg	jar	7/8/92	appl	6/22/92	6/26/92	44.3	nd	ug/jar		spray #4	10.0ug	20.0ug	4
119	121		78179	6/15/92	6/17/92	cg	jar	7/8/92	appl	6/22/92	6/26/92	61.5	nd	ug/jar		spray #4	10.0ug	20.0ug	4
119	122		78180	6/15/92	6/17/92	cg	jar	7/8/92	appl	6/22/92	6/26/92	47.7	nd	ug/jar		spray #5	10.0ug	20.0ug	4
119	123		78181	6/15/92	6/17/92	cg	jar	7/8/92	appl	6/22/92	6/26/92	38.6	nd	ug/jar		spray #5	10.0ug	20.0ug	4
119	124		78182	6/15/92	6/17/92	cg	jar	7/8/92	appl	6/23/92	6/25/92	210	nd	ug/jar		spray #6	10.0ug	20.0ug	6
119	125		78183	6/15/92	6/17/92	cg	jar	7/8/92	appl	6/23/92	6/25/92	132	nd	ug/jar		spray #6	10.0ug	20.0ug	6
119	126		78184	6/15/92	6/17/92	cg	jar	7/8/92	appl	6/23/92	6/25/92	149	nd	ug/jar		spray #7	10.0ug	20.0ug	6
119	127		78185	6/15/92	6/17/92	cg	jar	7/8/92	appl	6/23/92	6/25/92	264	nd	ug/jar		spray #7	10.0ug	20.0ug	6
119	128		78186	6/15/92	6/17/92	cg	jar	7/8/92	appl	6/23/92	6/26/92	87	nd	ug/jar		spray #8	10.0ug	20.0ug	6
119	129		78187	6/15/92	6/17/92	cg	jar	7/8/92	appl	6/23/92	6/26/92	123	nd	ug/jar		spray #8	10.0ug	20.0ug	6

California Department of Pesticide Regulation / Environmental Hazards Assessment Program

CSUFresno

Sample Tracking

Stud No.	EHAP No.	Samp code	Lab No.	Date Collected	Date Delivered	Log In	Samp Type	Date Due	Lab	Date Extracted	Date Analyzed	Mala-thion	Mala-oxon	Report Units		Comment / Method / Blind Spike Recovery	Parent MDL	Oxon MDL	QC Report #
119	130		78188	6/15/92	6/17/92	cg	jar	7/8/92	appl	6/23/92	6/26/92	135	nd	ug/jar		spray #9	10.0ug	20.0ug	6
119	131		78189	6/15/92	6/17/92	cg	jar	7/8/92	appl	6/23/92	6/26/92	113	nd	ug/jar		spray #9	10.0ug	20.0ug	6
119	132		78190	6/15/92	6/17/92	cg	jar	7/8/92	appl	6/23/92	6/26/92	200	nd	ug/jar		spray #10	10.0ug	20.0ug	6
119	133		78191	6/15/92	6/17/92	cg	jar	7/8/92	appl	6/23/92	6/26/92	26	nd	ug/jar		spray #10	10.0ug	20.0ug	6
119	134		78192	6/15/92	6/17/92	cg	jar	7/8/92	appl	6/24/92	6/26/92	230	nd	ug/jar		spray #11	10.0ug	20.0ug	8
119	135		78193	6/15/92	6/17/92	cg	jar	7/8/92	appl	6/24/92	6/26/92	41	nd	ug/jar		spray #11	10.0ug	20.0ug	8
119	136		78194	6/15/92	6/17/92	cg	jar	7/8/92	appl	6/24/92	6/26/92	29	nd	ug/jar		spray #12	10.0ug	20.0ug	8
119	137		78195	6/15/92	6/17/92	cg	jar	7/8/92	appl	6/24/92	6/26/92	406	nd	ug/jar		spray #12	10.0ug	20.0ug	8
119	138		78196	6/15/92	6/17/92	cg	jar	7/8/92	appl	6/24/92	6/26/92	89	nd	ug/jar		spray #13	10.0ug	20.0ug	8
119	139		78197	6/15/92	6/17/92	cg	jar	7/8/92	appl	6/24/92	6/26/92	93	nd	ug/jar		spray #13	10.0ug	20.0ug	8
119	140		78158	6/15/92	6/17/92	cg	soi	7/8/92	appl	6/23/92	6/27/92	1600	nd	ug/kg		Application	100ug/kg	200ug/kg	6
119	141		78167	6/15/92	6/17/92	cg	san	7/8/92	appl	6/23/92	6/27/92	1800	nd	ug/kg		Application	100ug/kg	200ug/kg	6
119	142		78159	6/15/92	6/17/92	cg	soi	7/8/92	appl	6/23/92	6/27/92	670	nd	ug/kg		Application	100ug/kg	200ug/kg	6
119	143		78168	6/15/92	6/17/92	cg	san	7/8/92	appl	6/23/92	6/27/92	470	nd	ug/kg		Application	100ug/kg	200ug/kg	6
119	144		78169	6/15/92	6/17/92	cg	san	7/8/92	appl	6/23/92	6/27/92	2300	nd	ug/kg		Application	100ug/kg	200ug/kg	6
119	145		78160	6/15/92	6/17/92	cg	soi	7/8/92	appl	6/23/92	6/27/92	1900	nd	ug/kg		Application	100ug/kg	200ug/kg	6
119	146		78170	6/15/92	6/17/92	cg	san	7/8/92	appl	6/23/92	6/27/92	8500	nd	ug/kg		Application	100ug/kg	200ug/kg	6
119	147		78161	6/15/92	6/17/92	cg	soi	7/8/92	appl	6/23/92	6/27/92	290	nd	ug/kg		Application	100ug/kg	200ug/kg	6
119	148		78162	6/15/92	6/17/92	cg	soi	7/8/92	appl	6/23/92	7/22/92	81	nd	ug/kg		Application	5.0ug/kg	10.0ug/kg	6
119	149		78171	6/15/92	6/17/92	cg	san	7/8/92	appl	6/23/92	6/27/92	1300	nd	ug/kg		Application	100ug/kg	200ug/kg	6
119	150		78163	6/15/92	6/17/92	cg	soi	7/8/92	appl	6/23/92	7/22/92	130	nd	ug/kg		Application	5.0ug/kg	10.0ug/kg	6
119	151		78172	6/15/92	6/17/92	cg	san	7/8/92	appl	6/23/92	6/27/92	380	nd	ug/kg		Application	100ug/kg	200ug/kg	6
119	152		78164	6/15/92	6/17/92	cg	soi	7/8/92	appl	6/23/92	6/27/92	410	nd	ug/kg		Application	100ug/kg	200ug/kg	6
119	153		78173	6/15/92	6/17/92	cg	san	7/8/92	appl	6/23/92	6/27/92	280	nd	ug/kg		Application	100ug/kg	200ug/kg	6
119	154		78165	6/15/92	6/17/92	cg	soi	7/8/92	appl	6/23/92	6/27/92	540	nd	ug/kg		Application	100ug/kg	200ug/kg	6
119	155		78174	6/15/92	6/17/92	cg	san	7/8/92	appl	6/23/92	6/27/92	130	nd	ug/kg		Application	100ug/kg	200ug/kg	6
119	156		78153	6/16/92	6/17/92	cg	wat	7/8/92	appl	6/19/92	6/27/92	1064	nd	ug/l		12 Hour	63ug/l	126ug/l	3
119	157		78154	6/16/92	6/17/92	cg	wat	7/8/92	appl	6/19/92	6/27/92	1388	nd	ug/l		12 Hour	62ug/l	124ug/l	3
119	158		78155	6/16/92	6/17/92	cg	wat	7/8/92	appl	6/19/92	6/27/92	1766	nd	ug/l		12 Hour	64ug/l	128ug/l	3
119	159		78156	6/16/92	6/17/92	cg	wat	7/8/92	appl	6/19/92	6/27/92	1573	nd	ug/l		12 Hour	63ug/l	126ug/l	3
119	160		78117	6/16/92	6/17/92	cg	tom	7/8/92	appl	6/17/92	6/20/92	28.4	nd	ug/229.1cm2	Dis	12 Hour	5.0ug	10.0ug	1
119	160		78135	6/16/92	6/17/92	cg	tom	7/8/92	appl	6/17/92	6/26/92	58.4	nd	ug/kg	Int	12 Hour	1.5ug/kg	3.0ug/kg	1
119	161		78118	6/16/92	6/17/92	cg	tom	7/8/92	appl	6/17/92	6/20/92	24.7	nd	ug/215.2cm2	Dis	12 Hour	5.0ug	10.0ug	1
119	161		78136	6/16/92	6/17/92	cg	tom	7/8/92	appl	6/17/92	6/26/92	88.1	nd	ug/kg	Int	12 Hour	1.8ug/kg	3.5ug/kg	1
119	162		78119	6/16/92	6/17/92	cg	tom	7/8/92	appl	6/17/92	6/20/92	50.8	nd	ug/189.4cm2	Dis	12 Hour	5.0ug	10.0ug	1
119	162		78137	6/16/92	6/17/92	cg	tom	7/8/92	appl	6/17/92	6/26/92	58.2	nd	ug/kg	Int	12 Hour	1.9ug/kg	3.7ug/kg	1
119	163		78120	6/16/92	6/17/92	cg	tom	7/8/92	appl	6/17/92	6/20/92	29.3	nd	ug/181.2cm2	Dis	12 Hour	5.0ug	10.0ug	1
119	163		78138	6/16/92	6/17/92	cg	tom	7/8/92	appl	6/17/92	6/26/92	21.9	nd	ug/kg	Int	12 Hour	2.5ug/kg	5.0ug/kg	1

California Department of Pesticide Regulation / Environmental Hazards Assessment Program

CSUFresno

Sample Tracking

Stud No.	EHAP No.	Samp code	Lab No.	Date Collected	Date Delivered	Log In	Samp Type	Date Due	Lab	Date Extracted	Date Analyzed	Mala-thion	Mala-oxon	Report Units		Comment / Method / Blind Spike Recovery	Parent MDL	Oxon MDL	QC Report #
119	164		78126	6/16/92	6/17/92	cg	let	7/8/92	appl	6/17/92	6/20/92	8.12	nd	ug/28.9cm2	Dis	12 Hour	5.0ug	10.0ug	1
119	164		78144	6/16/92	6/17/92	cg	let	7/8/92	appl	6/17/92	6/27/92	nd	nd	ug/kg	Int	12 Hour	167ug/kg	330ug/kg	1
119	165		78127	6/16/92	6/17/92	cg	let	7/8/92	appl	6/17/92	6/20/92	7.90	nd	ug/30.0cm2	Dis	12 Hour	5.0ug	10.0ug	1
119	165		78145	6/16/92	6/17/92	cg	let	7/8/92	appl	6/17/92	6/27/92	368.3	nd	ug/kg	Int	12 Hour	350ug/kg	700ug/kg	1
119	166		78128	6/16/92	6/17/92	cg	let	7/8/92	appl	6/17/92	6/20/92	5.44	nd	ug/26.0cm2	Dis	12 Hour	5.0ug	10.0ug	1
119	166		78146	6/16/92	6/17/92	cg	let	7/8/92	appl	6/17/92	6/27/92	665.1	nd	ug/kg	Int	12 Hour	380ug/kg	750ug/kg	1
119	167		78129	6/16/92	6/17/92	cg	let	7/8/92	appl	6/17/92	6/20/92	14.2	nd	ug/60.7cm2	Dis	12 Hour	5.0ug	10.0ug	1
119	167		78147	6/16/92	6/17/92	cg	let	7/8/92	appl	6/17/92	6/27/92	391	nd	ug/kg	Int	12 Hour	160ug/kg	320ug/kg	1
119	168		78269	6/16/92	6/18/92	cg	soi	7/9/92	appl	6/24/92	6/26/92	403	nd	ug/kg		24 Hour	10ug/kg	20ug/kg	7
119	169		78270	6/16/92	6/18/92	cg	san	7/9/92	appl	6/24/92	6/26/92	150	nd	ug/kg		24 Hour	100ug/kg	20ug/kg	7
119	170		78271	6/16/92	6/18/92	cg	soi	7/9/92	appl	6/24/92	6/27/92	nd	nd	ug/kg		24 Hour	10ug/kg	20ug/kg	7
119	171		78272	6/16/92	6/18/92	cg	san	7/9/92	appl	6/24/92	6/27/92	164	nd	ug/kg		24 Hour	10ug/kg	20ug/kg	7
119	172		78273	6/16/92	6/18/92	cg	soi	7/9/92	appl	6/24/92	6/27/92	565	nd	ug/kg		24 Hour	10ug/kg	20ug/kg	7
119	173		78274	6/16/92	6/18/92	cg	san	7/9/92	appl	6/24/92	6/27/92	920	nd	ug/kg		24 Hour	10ug/kg	20ug/kg	7
119	174		78275	6/16/92	6/18/92	cg	soi	7/9/92	appl	6/24/92	6/27/92	70	nd	ug/kg		24 Hour	10ug/kg	20ug/kg	7
119	175		78276	6/16/92	6/18/92	cg	san	7/9/92	appl	6/24/92	6/27/92	472	nd	ug/kg		24 Hour	10ug/kg	20ug/kg	7
119	176		78265	6/16/92	6/18/92	cg	wat	7/9/92	appl	6/22/92	6/26/92	205	nd	ug/l		24 Hour	0.5ug/l	1.0ug/l	5
119	177		78266	6/16/92	6/18/92	cg	wat	7/9/92	appl	6/22/92	6/26/92	1200	nd	ug/l		24 Hour	50ug/l	100ug/l	5
119	178		78267	6/16/92	6/18/92	cg	wat	7/9/92	appl	6/22/92	6/26/92	635	nd	ug/l		24 Hour	50ug/l	100ug/l	5
119	179		78268	6/16/92	6/18/92	cg	wat	7/9/92	appl	6/22/92	6/26/92	214	nd	ug/l		24 Hour	50ug/l	100ug/l	5
119	180		78249	6/16/92	6/19/92	cg	let	7/10/92	appl	6/18/92	6/20/92	0.5	nd	ug/24.3cm2	Dis	24 Hour	0.5ug	1ug	12
119	180		78257	6/16/92	6/19/92	cg	let	7/10/92	appl	6/18/92	6/26/92	nd	nd	ug/kg	Int	24 Hour	800ug/kg	1600ug/kg	12
119	181		78250	6/16/92	6/19/92	cg	let	7/10/92	appl	6/18/92	6/20/92	5.1	nd	ug/25.7cm2	Dis	24 Hour	0.5ug	1ug	12
119	181		78258	6/16/92	6/19/92	cg	let	7/10/92	appl	6/18/92	6/26/92	nd	nd	ug/kg	Int	24 Hour	490ug/kg	980ug/kg	12
119	182		78251	6/16/92	6/19/92	cg	let	7/10/92	appl	6/18/92	6/20/92	8.2	nd	ug/33.3cm2	Dis	24 Hour	0.5ug	1ug	12
119	182		78259	6/16/92	6/19/92	cg	let	7/10/92	appl	6/18/92	6/26/92	1277	nd	ug/kg	Int	24 Hour	370ug/kg	740ug/kg	12
119	183		78252	6/16/92	6/19/92	cg	let	7/10/92	appl	6/18/92	6/20/92	4.0	nd	ug/24.4cm2	Dis	24 Hour	0.5ug	1ug	12
119	183		78260	6/16/92	6/19/92	cg	let	7/10/92	appl	6/18/92	6/26/92	899	nd	ug/kg	Int	24 Hour	500ug/kg	1000ug/kg	12
119	184		78253	6/16/92	6/19/92	cg	tom	7/10/92	appl	6/18/92	6/20/92	28.1	nd	ug/175.9cm2	Dis	24 Hour	0.5ug	1ug	12
119	184		78261	6/16/92	6/19/92	cg	tom	7/10/92	appl	6/18/92	6/26/92	143	8.0	ug/kg	Int	24 Hour	2.4g/kg	4.9ug/kg	12
119	185		78254	6/16/92	6/19/92	cg	tom	7/10/92	appl	6/18/92	6/20/92	72.0	nd	ug/190.6cm2	Dis	24 Hour	0.5ug	1ug	12
119	185		78262	6/16/92	6/19/92	cg	tom	7/10/92	appl	6/18/92	6/26/92	270	12.4	ug/kg	Int	24 Hour	2.4g/kg	4.9ug/kg	12
119	186		78255	6/16/92	6/19/92	cg	tom	7/10/92	appl	6/18/92	6/20/92	3.7	nd	ug/221.5cm2	Dis	24 Hour	0.5ug	1ug	12
119	186		78263	6/16/92	6/19/92	cg	tom	7/10/92	appl	6/18/92	6/26/92	61	7.7	ug/kg	Int	24 Hour	2.4g/kg	4.9ug/kg	12
119	187		78256	6/16/92	6/19/92	cg	tom	7/10/92	appl	6/18/92	6/20/92	31.3	nd	ug/196.5cm2	Dis	24 Hour	0.5ug	1ug	12
119	187		78264	6/16/92	6/19/92	cg	tom	7/10/92	appl	6/18/92	6/26/92	528	14.3	ug/kg	Int	24 Hour	3.0g/kg	6.0ug/kg	12
119	188	s	78317	6/17/92	6/19/92	jb	tom	7/10/92	appl	6/19/92	6/24/92	144	nd	ug/198.4cm2	Dis	spiked @50ug	0.5ug	1.0ug	2
119	188		78327	6/17/92	6/19/92	jb	tom	7/10/92	appl	6/19/92	6/28/92	11.6	nd	ug/kg	Int		0.5ug/kg	1.0ug/kg	2

California Department of Pesticide Regulation / Environmental Hazards Assessment Program

CSUFresno

Sample Tracking

Stud No.	EHAP No.	Samp code	Lab No.	Date Collected	Date Delivered	Log In	Samp Type	Date Due	Lab	Date Extracted	Date Analyzed	Mala-thion	Mala-oxon	Report Units		Comment / Method / Blind Spike Recovery	Parent MDL	Oxon MDL	QC Report #
119	189	S	78322	6/17/92	6/19/92	jb	let	7/10/92	appl	6/19/92	6/24/92	55.1	nd	ug/40.1cm2	Dis	spiked @50ug	0.5ug	1.0ug	2
119	189		78332	6/17/92	6/19/92	jb	let	7/10/92	appl	6/19/92	6/28/92	880	nd	ug/kg	Int		160ug/kg	320ug/kg	2
119	190	S	78337	6/17/92	6/19/92	jb	wat	7/10/92	appl	6/22/92	6/26/92	255	nd	ug/l		spiked @500ug	60ug/l	120ug/l	5
119	191	S	78341	6/17/92	6/19/92	jb	san	7/10/92	appl	6/24/92	6/27/92	947	nd	ug/kg		spiked @50ug	100ug/kg	200ug/kg	11
119	192	S	78342	6/17/92	6/19/92	jb	soi	7/10/92	appl	6/24/92	6/27/92	995	nd	ug/kg		spiked @50ug	100ug/kg	200ug/kg	11
119	193	S	78343	6/17/92	6/19/92	jb	jar	7/10/92	appl	6/24/92	7/24/92	63	nd	ug/jar		spiked @50ug	10ug	20ug	11
119	194		78318	6/17/92	6/19/92	jb	tom	7/10/92	appl	6/19/92	6/24/92	3.0	nd	ug/193.6cm2	Dis	48 Hour	0.5ug	1.0ug	2
119	194		78328	6/17/92	6/19/92	jb	tom	7/10/92	appl	6/19/92	6/28/92	6.4	nd	ug/kg	Int	48 Hour	0.5ug/kg	1.0ug/kg	2
119	195		78319	6/17/92	6/19/92	jb	tom	7/10/92	appl	6/19/92	6/24/92	34.3	nd	ug/217.2cm2	Dis	48 Hour	0.5ug	1.0ug	2
119	195		78329	6/17/92	6/19/92	jb	tom	7/10/92	appl	6/19/92	6/28/92	51.3	nd	ug/kg	Int	48 Hour	0.5ug/kg	1.0ug/kg	2
119	196		78320	6/17/92	6/19/92	jb	tom	7/10/92	appl	6/19/92	6/24/92	46.4	nd	ug/252.02cm2	Dis	48 Hour	0.5ug	1.0ug	2
119	196		78330	6/17/92	6/19/92	jb	tom	7/10/92	appl	Sample broken					Int	48 Hour			2
119	197		78321	6/17/92	6/19/92	jb	tom	7/10/92	appl	6/19/92	6/24/92	24.0	nd	ug/198.4cm2	Dis	48 Hour	0.5ug	1.0ug	2
119	197		78331	6/17/92	6/19/92	jb	tom	7/10/92	appl	6/19/92	6/28/92	15.5	nd	ug/kg	Int	48 Hour	0.5ug/kg	1.0ug/kg	2
119	198		78344	6/17/92	6/19/92	jb	soi	7/10/92	appl	6/24/92	6/27/92	577	nd	ug/kg		48 Hour	100ug/kg	200ug/kg	11
119	199		78345	6/17/92	6/19/92	jb	san	7/10/92	appl	6/24/92	6/27/92	528	nd	ug/kg		48 Hour	100ug/kg	200ug/kg	11
119	200		78346	6/17/92	6/19/92	jb	soi	7/10/92	appl	6/26/92	6/29/92	950	nd	ug/kg		48 Hour	100ug/kg	200ug/kg	9
119	201		78347	6/17/92	6/19/92	jb	san	7/10/92	appl	6/26/92	6/29/92	472	nd	ug/kg		48 Hour	100ug/kg	200ug/kg	9
119	202		78348	6/17/92	6/19/92	jb	soi	7/10/92	appl	6/26/92	6/30/92	479	nd	ug/kg		48 Hour	100ug/kg	200ug/kg	9
119	203		78349	6/17/92	6/19/92	jb	san	7/10/92	appl	6/26/92	6/30/92	151	nd	ug/kg		48 Hour	100ug/kg	200ug/kg	9
119	204		78350	6/17/92	6/19/92	jb	soi	7/10/92	appl	6/26/92	6/30/92	218	nd	ug/kg		48 Hour	100ug/kg	200ug/kg	9
119	205		78351	6/17/92	6/19/92	jb	san	7/10/92	appl	6/26/92	6/30/92	401	nd	ug/kg		48 Hour	100ug/kg	200ug/kg	9
119	206		78323	6/17/92	6/19/92	jb	let	7/10/92	appl	6/19/92	6/24/92	2.77	nd	ug/73.0cm2	Dis	48 Hour	0.5ug	1.0ug	2
119	206		78333	6/17/92	6/19/92	jb	let	7/10/92	appl	6/19/92	6/28/92	nd	nd	ug/kg	Int	48 Hour	137ug/kg	274ug/kg	2
119	207		78324	6/17/92	6/19/92	jb	let	7/10/92	appl	6/19/92	6/24/92	5.56	nd	ug/33.4cm2	Dis	48 Hour	0.5ug	1.0ug	2
119	207		78334	6/17/92	6/19/92	jb	let	7/10/92	appl	6/19/92	6/28/92	nd	nd	ug/kg	Int	48 Hour	368ug/kg	736ug/kg	2
119	208		78325	6/17/92	6/19/92	jb	let	7/10/92	appl	6/19/92	6/24/92	3.63	nd	ug/28.5cm2	Dis	48 Hour	0.5ug	1.0ug	2
119	208		78335	6/17/92	6/19/92	jb	let	7/10/92	appl	6/19/92	6/28/92	nd	nd	ug/kg	Int	48 Hour	403ug/kg	806ug/kg	2
119	209		78326	6/17/92	6/19/92	jb	let	7/10/92	appl	6/19/92	6/24/92	13.4	nd	ug/73.5cm2	Dis	48 Hour	0.5ug	1.0ug	2
119	209		78336	6/17/92	6/19/92	jb	let	7/10/92	appl	6/19/92	6/28/92	302	nd	ug/kg	Int	48 Hour	137ug/kg	274ug/kg	2
119	210		78338	6/17/92	6/19/92	jb	wat	7/10/92	appl	6/22/92	6/26/92	294	nd	ug/l		48 Hour	60ug/l	120ug/l	5
119	211		78339	6/17/92	6/19/92	jb	wat	7/10/92	appl	6/22/92	6/26/92	583	nd	ug/l		48 Hour	60ug/l	120ug/l	5
119	212		broken	6/17/92	6/18/92	jb	wat	7/9/92	appl										
119	213		78340	6/17/92	6/19/92	jb	wat	7/10/92	appl	6/22/92	6/26/92	1093	nd	ug/l		48 Hour	65ug/l	130ug/l	5
119	214		78387	6/19/92	6/20/92	jb	san	7/11/92	appl	6/24/92	6/27/92	106.4	nd	ug/kg		95 Hour	100ug/kg	200ug/kg	11
119	215		78388	6/19/92	6/20/92	jb	soi	7/11/92	appl	6/24/92	6/27/92	240.9	nd	ug/kg		95 Hour	100ug/kg	200ug/kg	11
119	216		78389	6/19/92	6/20/92	jb	san	7/11/92	appl	6/24/92	6/27/92	128.5	nd	ug/kg		95 Hour	100ug/kg	200ug/kg	11
119	217		78390	6/19/92	6/20/92	jb	soi	7/11/92	appl	6/24/92	6/28/92	36.9	25.2	ug/kg		95 Hour	100ug/kg	200ug/kg	11

California Department of Pesticide Regulation / Environmental Hazards Assessment Program

CSUFresno

Sample Tracking

Stud No.	EHAP No.	Samp code	Lab No.	Date Collected	Date Delivered	Log In	Samp Type	Date Due	Lab	Date Extracted	Date Analyzed	Mala-thion	Mala-oxon	Report Units		Comment / Method / Blind Spike Recovery	Parent MDL	Oxon MDL	QC Report #
119	218		78391	6/19/92	6/20/92	jb	san	7/11/92	appl	6/24/92	6/27/92	760.8	nd	ug/kg		95 Hour	100ug/kg	200ug/kg	11
119	219		78392	6/19/92	6/20/92	jb	soi	7/11/92	appl	6/24/92	6/27/92	525.5	nd	ug/kg		95 Hour	100ug/kg	200ug/kg	11
119	220		78393	6/19/92	6/20/92	jb	san	7/11/92	appl	6/24/92	6/27/92	144.1	nd	ug/kg		95 Hour	100ug/kg	200ug/kg	11
119	221		78394	6/19/92	6/20/92	jb	soi	7/11/92	appl	6/24/92	6/27/92	411.7	nd	ug/kg		95 Hour	100ug/kg	200ug/kg	11
119	222		78395	6/19/92	6/20/92	jb	wat	7/11/92	appl	6/26/92	6/30/92	1175	nd	ug/kl		95 Hour	10ug/l	20ug/l	14
119	223		78396	6/19/92	6/20/92	jb	wat	7/11/92	appl	6/26/92	6/30/92	588	nd	ug/l		95 Hour	10ug/l	20ug/l	14
119	224		78397	6/19/92	6/20/92	jb	wat	7/11/92	appl	6/26/92	6/30/92	178	nd	ug/l		95 Hour	10ug/l	20ug/l	14
119	225		78398	6/19/92	6/20/92	jb	wat	7/11/92	appl	6/26/92	6/30/92	1689	nd	ug/l		95 Hour	10ug/l	20ug/l	14
119	226		78371	6/19/92	6/20/92	jb	tom	7/11/92	appl	6/20/92	6/25/92	22.8	nd	ug/249.1cm2	Dis	95 Hour	0.5ug	1.0ug	15
119	226		78379	6/19/92	6/20/92	jb	tom	7/11/92	appl	6/20/92	6/30/92	nd	nd	ug/kg	Int	95 Hour	5ug/kg	10ug/kg	15
119	227		78372	6/19/92	6/20/92	jb	tom	7/11/92	appl	6/20/92	6/25/92	8.13	nd	ug/144.8cm2	Dis	95 Hour	0.5ug	1.0ug	15
119	227		78380	6/19/92	6/20/92	jb	tom	7/11/92	appl	6/20/92	6/30/92	10.4	nd	ug/kg	Int	95 Hour	5ug/kg	10ug/kg	15
119	228		78373	6/19/92	6/20/92	jb	tom	7/11/92	appl	6/20/92	6/25/92	20.0	nd	ug/244.6cm2	Dis	95 Hour	0.5ug	1.0ug	15
119	228		78381	6/19/92	6/20/92	jb	tom	7/11/92	appl	6/20/92	6/30/92	36.2	8.82	ug/kg	Int	95 Hour	2.5ug/kg	5ug/kg	15
119	229		78374	6/19/92	6/20/92	jb	tom	7/11/92	appl	6/20/92	6/25/92	15.6	nd	ug/244.1cm2	Dis	95 Hour	0.5ug	1.0ug	15
119	229		78382	6/19/92	6/20/92	jb	tom	7/11/92	appl	6/20/92	6/30/92	nd	nd	ug/kg	Int	95 Hour	2.5ug/kg	5ug/kg	15
119	230		78375	6/19/92	6/20/92	jb	let	7/11/92	appl	6/20/92	6/25/92	5.5	nd	ug/63.8cm2	Dis	95 Hour	0.5ug	1.0ug	15
119	230		78383	6/19/92	6/20/92	jb	let	7/11/92	appl	6/20/92	6/30/92	nd	nd	ug/kg	Int	95 Hour	2.5ug/kg	5ug/kg	15
119	231		78376	6/19/92	6/20/92	jb	let	7/11/92	appl	6/20/92	6/25/92	2.5	nd	ug/44.8cm2	Dis	95 Hour	0.5ug	1.0ug	15
119	231		78384	6/19/92	6/20/92	jb	let	7/11/92	appl	6/20/92	6/30/92	nd	nd	ug/kg	Int	95 Hour	2.5ug/kg	5ug/kg	15
119	232		78377	6/19/92	6/20/92	jb	let	7/11/92	appl	6/20/92	6/25/92	3.8	nd	ug/56.8cm2	Dis	95 Hour	0.5ug	1.0ug	15
119	232		78385	6/19/92	6/20/92	jb	let	7/11/92	appl	6/20/92	6/30/92	nd	nd	ug/kg	Int	95 Hour	2.5ug/kg	5ug/kg	15
119	233		78378	6/19/92	6/20/92	jb	let	7/11/92	appl	6/20/92	6/25/92	1.2	nd	ug/36.5cm2	Dis	95 Hour	0.5ug	1.0ug	15
119	233		78386	6/19/92	6/20/92	jb	let	7/11/92	appl	6/20/92	6/30/92	nd	nd	ug/kg	Int	95 Hour	2.5ug/kg	5ug/kg	15
119	234		78359	6/19/92	6/20/92	jb	tan	7/11/92	appl	7/2/92	7/6/92	122280	nd	ug/l		Tank Sample	5000ug	10000ug	13
119	235		78651	6/25/92	6/26/92	jb	san	7/17/92	appl	7/1/92	7/13/92	46.7	33.9	ug/kg		239 Hour	5.0ug/kg	10.0ug/kg	18
119	236		78652	6/25/92	6/26/92	jb	soi	7/17/92	appl	7/1/92	7/13/92	238.9	126.8	ug/kg		239 Hour	5.0ug/kg	10.0ug/kg	18
119	237		78653	6/25/92	6/26/92	jb	san	7/17/92	appl	7/1/92	7/13/92	90.9	41.5	ug/kg		239 Hour	5.0ug/kg	10.0ug/kg	18
119	238		78654	6/25/92	6/26/92	jb	soi	7/17/92	appl	7/1/92	7/13/92	24.3	20.0	ug/kg		239 Hour	5.0ug/kg	10.0ug/kg	18
119	239		78655	6/25/92	6/26/92	jb	san	7/17/92	appl	7/1/92	7/13/92	383.7	64.2	ug/kg		239 Hour	5.0ug/kg	10.0ug/kg	18
119	240		78656	6/25/92	6/26/92	jb	soi	7/17/92	appl	7/1/92	7/13/92	171.7	107.5	ug/kg		239 Hour	5.0ug/kg	10.0ug/kg	18
119	241		78657	6/25/92	6/26/92	jb	san	7/17/92	appl	7/1/92	7/13/92	567.4	47.4	ug/kg		239 Hour	5.0ug/kg	10.0ug/kg	18
119	242		78658	6/25/92	6/26/92	jb	soi	7/17/92	appl	7/1/92	7/13/92	277.7	118.1	ug/kg		239 Hour	5.0ug/kg	10.0ug/kg	18
119	243		78646	6/25/92	6/26/92	jb	wat	7/17/92	appl	7/2/92	7/22/92	nd	nd	ug/l		239 Hour	0.7ug/l	1.4ug/l	19
119	244		78647	6/25/92	6/26/92	jb	wat	7/17/92	appl	7/2/92	7/22/92	nd	nd	ug/l		239 Hour	1.0ug/l	2.0ug/l	19
119	245		78648	6/25/92	6/26/92	jb	wat	7/17/92	appl	7/2/92	7/22/92	nd	nd	ug/l		239 Hour	0.6ug/l	1.2ug/l	19
119	246		78649	6/25/92	6/26/92	jb	wat	7/17/92	appl	7/2/92	7/22/92	3.3	nd	ug/l		239 Hour	0.5ug/l	1.0ug/l	19
119	247		78620	6/25/92	6/26/92	jb	tom	7/17/92	appl	6/26/92	6/29/92	12.1	nd	ug/210.3cm3	Dis	239 Hour	5.0ug	10.0ug	10

California Department of Pesticide Regulation / Environmental Hazards Assessment Program

CSUFresno

Sample Tracking

Stud No.	EHAP No.	Samp code	Lab No.	Date Collected	Date Delivered	Log In	Samp Type	Date Due	Lab	Date Extracted	Date Analyzed	Mala-thion	Mala-oxon	Report Units		Comment / Method / Blind Spike Recovery	Parent MDL	Oxon MDL	QC Report #
119	247		78630	6/25/92	6/26/92	jb	tom	7/17/92	appl	6/26/92	7/7/92	13.0	nd	ug/kg	Int	239 Hour	2.6ug/kg	5.3ug/kg	10
119	248		78621	6/25/92	6/26/92	jb	tom	7/17/92	appl	6/26/92	6/30/92	18.6	nd	ug/195.7cm3	Dis	239 Hour	5.0ug	10.0ug	10
119	248		78631	6/25/92	6/26/92	jb	tom	7/17/92	appl	6/26/92	7/7/92	nd	nd	ug/kg	Int	239 Hour	2.7ug/kg	5.4ug/kg	10
119	249		78622	6/25/92	6/26/92	jb	tom	7/17/92	appl	6/26/92	6/30/92	3.0	nd	ug/207.1cm3	Dis	239 Hour	5.0ug	10.0ug	10
119	249		78632	6/25/92	6/26/92	jb	tom	7/17/92	appl	6/26/92	7/7/92	nd	nd	ug/kg	Int	239 Hour	2.9ug/kg	5.7ug/kg	10
119	250		78623	6/25/92	6/26/92	jb	tom	7/17/92	appl	6/26/92	6/30/92	19.8	nd	ug/175.2cm3	Dis	239 Hour	5.0ug	10.0ug	10
119	250		78633	6/25/92	6/26/92	jb	tom	7/17/92	appl	6/26/92	7/7/92	11.9	nd	ug/kg	Int	239 Hour	3.8ug/kg	7.6ug/kg	10
119	251		78625	6/25/92	6/26/92	jb	let	7/17/92	appl	6/26/92	6/30/92	1.3	nd	ug/55.7cm3	Dis	239 Hour	5.0ug	10.0ug	10
119	251		78635	6/25/92	6/26/92	jb	let	7/17/92	appl	6/26/92	7/7/92	nd	nd	ug/kg	Int	239 Hour	200ug/kg	400ug/kg	10
119	252		78626	6/25/92	6/26/92	jb	let	7/17/92	appl	6/26/92	6/30/92	4.7	nd	ug/102.0cm3	Dis	239 Hour	5.0ug	10.0ug	10
119	252		78636	6/25/92	6/26/92	jb	let	7/17/92	appl	6/26/92	7/7/92	1290	nd	ug/kg	Int	239 Hour	90ug/kg	180ug/kg	10
119	253		78627	6/25/92	6/26/92	jb	let	7/17/92	appl	6/26/92	6/30/92	3.0	nd	ug/89.4cm3	Dis	239 Hour	5.0ug	10.0ug	10
119	253		78637	6/25/92	6/26/92	jb	let	7/17/92	appl	6/26/92	7/7/92	nd	nd	ug/kg	Int	239 Hour	100ug/kg	200ug/kg	10
119	254		78628	6/25/92	6/26/92	jb	let	7/17/92	appl	6/26/92	6/30/92	1.8	nd	ug/73.5cm3	Dis	239 Hour	5.0ug	10.0ug	10
119	254		78638	6/25/92	6/26/92	jb	let	7/17/92	appl	6/26/92	7/7/92	240.8	nd	ug/kg	Int	239 Hour	150ug/kg	300ug/kg	10
119	255	s	78629	6/25/92	6/26/92	jb	let	7/17/92	appl	6/26/92	6/30/92	64.6	nd	ug/73.9cm3	Dis	spiked@ 25ug	5.0ug	10.0ug	10
119	255		78639	6/25/92	6/26/92	jb	let	7/17/92	appl	6/26/92	7/7/92	452	nd	ug/kg	Int	239 Hour	85ug/kg	170ug/kg	10
119	256	s	78624	6/25/92	6/26/92	jb	tom	7/17/92	appl	6/26/92	6/30/92	175.0	nd	ug/136.9cm3	Dis	spiked@ 25ug	5.0ug	10.0ug	10
119	256		78634	6/25/92	6/26/92	jb	tom	7/17/92	appl	6/26/92	7/7/92	38.5	nd	ug/kg	Int	239 Hour	4.4ug/kg	8.8ug/kg	10
119	257	s	78661	6/25/92	6/26/92	jb	jar	7/17/92	appl	7/2/92	7/6/92	51.2	nd	ug/jar		spiked@ 25ug	.50ug/ja	1.0ug/jar	20
119	258	s	78659	6/25/92	6/26/92	jb	san	7/17/92	appl	7/1/92	7/13/92	1350.0	nd	ug/kg		spiked@ 25ug	25.0ug/kg	50.0ug/kg	18
119	259	s	78660	6/25/92	6/26/92	jb	soi	7/17/92	appl	7/1/92	7/13/92	952.0	nd	ug/kg		spiked@ 25ug	25.0ug/kg	50.0ug/kg	18
119	260	s	78650	6/25/92	6/26/92	jb	wat	7/17/92	appl	7/2/92	7/7/92	605.2	nd	ug/l		spiked@ 250ug	60.0ug/l	120.0ug/l	19
119	261		79053	7/6/92	7/7/92	jb	san	7/28/92	appl	7/10/92	7/29/92	9.2	18.5	ug/kg		504Hour	5.0ug/kg	10.0ug/kg	17
119	262		79057	7/6/92	7/7/92	jb	soi	7/28/92	appl	7/10/92	7/14/92	279.4	85.4	ug/kg		504Hour	5.0ug/kg	10.0ug/kg	17
119	263		79054	7/6/92	7/7/92	jb	san	7/28/92	appl	7/10/92	7/29/92	22.4	47.7	ug/kg		504Hour	5.0ug/kg	10.0ug/kg	17
119	264		79058	7/6/92	7/7/92	jb	soi	7/28/92	appl	7/10/92	7/14/92	147.9	92.9	ug/kg		504Hour	5.0ug/kg	10.0ug/kg	17
119	265		79055	7/6/92	7/7/92	jb	san	7/28/92	appl	7/10/92	7/29/92	nd	nd	ug/kg		504Hour	5.0ug/kg	10.0ug/kg	17
119	266		79059	7/6/92	7/7/92	jb	soi	7/28/92	appl	7/10/92	7/14/92	150.4	218.4	ug/kg		504Hour	5.0ug/kg	10.0ug/kg	17
119	267		79056	7/6/92	7/7/92	jb	san	7/28/92	appl	7/10/92	7/30/92	nd	22.5	ug/kg		504Hour	5.0ug/kg	10.0ug/kg	17
119	268		79060	7/6/92	7/7/92	jb	soi	7/28/92	appl	7/10/92	7/30/92	328.3	79.9	ug/kg		504Hour	5.0ug/kg	10.0ug/kg	17
119	269		79049	7/6/92	7/7/92	jb	wat	7/28/92	appl	7/10/92	7/14/92	nd	nd	ug/L		504 Hour	0.7ug/l	1.4ug/L	21
119	270		79050	7/6/92	7/7/92	jb	wat	7/28/92	appl	7/10/92	7/14/92	nd	nd	ug/L		504 Hour	1.3ug/l	2.6ug/L	21
119	271		79051	7/6/92	7/7/92	jb	wat	7/28/92	appl	7/10/92	7/14/92	0.80	nd	ug/L		504 Hour	0.7ug/l	1.4ug/L	21
119	272		79052	7/6/92	7/7/92	jb	wat	7/28/92	appl	7/10/92	7/14/92	0.80	3.9	ug/L		504 Hour	0.8ug/l	1.2ug/L	21
119	273		79045	7/6/92	7/7/92	jb	tom	7/28/92	appl	7/8/92	7/14/92	nd	nd	ug/219.7cm2	Dis	504 Hour	0.5ug	1.0ug	16
119	273		79062	7/6/92	7/7/92	jb	tom	7/28/92	appl	7/8/92	7/14/92	2.4	7.9	ug/kg	Int	504 Hour	2.0ug/kg	4.0ug/kg	16
119	274		79046	7/6/92	7/7/92	jb	tom	7/28/92	appl	7/8/92	7/14/92	3.4	nd	ug/174.2cm2	Dis	504 Hour	0.5ug	1.0ug	16

California Department of Pesticide Regulation / Environmental Hazards Assessment Program

CSUFresno

Sample Tracking

Stud No.	EHAP No.	Samp code	Lab No.	Date Collected	Date Delivered	Log In	Samp Type	Date Due	Lab	Date Extracted	Date Analyzed	Mala-thion	Mala-oxon	Report Units		Comment / Method / Blind Spike Recovery	Parent MDL	Oxon MDL	QC Report #
119	274		79063	7/6/92	7/7/92	jb	tom	7/28/92	appl	7/8/92	7/14/92	4.5	11.9	ug/kg	Int	504 Hour	3.2ug/kg	6.4ug/kg	16
119	275		79047	7/6/92	7/7/92	jb	tom	7/28/92	appl	7/8/92	7/14/92	0.92	nd	ug/167.4cm2	Dis	504 Hour	0.5ug	1.0ug	16
119	275		79064	7/6/92	7/7/92	jb	tom	7/28/92	appl	7/8/92	7/14/92	nd	24.2	ug/kg	Int	504 Hour	4.2ug/kg	8.5ug/kg	16
119	276		79048	7/6/92	7/7/92	jb	tom	7/28/92	appl	7/8/92	7/14/92	1.7	nd	ug/238.0cm2	Dis	504 Hour	0.5ug	1.0ug	16
119	276		79065	7/6/92	7/7/92	jb	tom	7/28/92	appl	7/8/92	7/14/92	5.3	16.2	ug/kg	Int	504 Hour	1.9ug/kg	3.9ug/kg	16

Appendix C

Quality Control - Raw Data

Study 119 Main Study QC Results - Tomato & Lettuce Dislodgable Duplicate Matrix Spikes #1

Study: 119
Analyte: Malathion and Malaoxon
MDL: Malathion - 5ug/L & Malaoxon - 10ug/L
Reporting Units: ug/L
Sample Extraction Set Reference:
78112-78129 Dislodgable

Sample Date: 6/15,16/92
Extraction Set Date: 6/17,18/92
Report Date: 7/23/92
Sample Type: Tomato & Lettuce
Lab: APPL

Tomato			Malathion		Malaoxon	
Lab Sample No.	Spike Level (ug/L)		Result (ug/L)	% Recovery	Result (ug/L)	% Recovery
78040 MA DIS	62.2		37.1	59.6	50.3	80.9
78040 MB DIS	65.5		48.7	74.4	67.6	103.2
		Mean		67.0		92.0
		RPD		21.9		24.3

Lettuce			Malathion		Malaoxon	
Lab Sample No.	Spike Level (ug/L)		Result (ug/L)	% Recovery	Result (ug/L)	% Recovery
920618 MA DIS	7196				6706	93.2
920618 MA DIS	6249		3993	63.9		
920618 MA DIS	6227				7036	113.0
920618 MA DIS	6250		4319	69.1		
		Mean		66.5		103.1
		RPD		7.8		19.2

Blanks - Dislodgable

			Malathion		Malaoxon	
Lab Sample No.	Spike Level (ug/L)	Matrix	Result (ug/L)	% Recovery	Result (ug/L)	% Recovery
BLANK M	0	Solvent	nd		nd	
BLANK M	0	Tomato	nd		nd	
BLANK M	0	Lettuce	nd		nd	

Study 119 Main Study QC Results - Tomato & Lettuce Internal Duplicate Matrix Spikes #1

Study: 119
Analyte: Malathion and Malaoxon
MDL: Malathion - 5ug/kg & Malaoxon - 10ug/kg
Reporting Units: ug/kg
Sample Extraction Set Reference:
78130-78147 Internal

Sample Date: 6/15,16/92
Extraction Set Date: 6/17,18/92
Report Date: 7/23/92
Sample Type: Tomato & Lettuce
Lab: APPL

Tomato			Malathion		Malaoxon	
Lab Sample No.	Spike Level (ug/kg)		Result (ug/kg)	% Recovery	Result (ug/kg)	% Recovery
78040 MA INT	83.2				64.5	77.5
78040 MA INT	47.3		48.6	102.7		
78040 MA INT	44.3				47	106.1
78040 MB INT	40.6		45.1	111.1		
		Mean		106.9		91.8
		RPD		7.8		31.1

Lettuce			Malathion		Malaoxon	
Lab Sample No.	Spike Level (ug/kg)		Result (ug/kg)	% Recovery	Result (ug/kg)	% Recovery
920618 MA INT	3546		2939	82.9	3401	95.9
920618 MA INT	4629		3856	83.3	4506	97.3
		Mean		83.1		96.6
		RPD		0.5		1.5

Blanks - Internal

			Malathion		Malaoxon	
Lab Sample No.	Spike Level	Matrix	Result	% Recovery	Result	% Recovery
BLANK M	0ug/L	Solvent	nd		nd	
BLANK M	0ug/kg	Tomato	nd		nd	
BLANK M	0ug/kg	Lettuce	nd		nd	

Study 119 Main Study QC Results - Tomato & Lettuce Dislodgable Duplicate Matrix Spikes #2

Study: 119
Analyte: Malathion and Malaoxon
MDL: Malathion - 5ug/L & Malaoxon - 10ug/L
Reporting Units: ug/L
Sample Extraction Set Reference:
78317-78326 Dislodgable

Sample Date: 6/17/92
Extraction Set Date: 6/19/92
Report Date: 7/23/92
Sample Type: Tomato & Lettuce
Lab: APPL

Tomato			Malathion		Malaoxon	
Lab Sample No.	Spike Level (ug/L)		Result (ug/L)	% Recovery	Result (ug/L)	% Recovery
78040 MA DIS	50.6		47.2	93.3	64	126.5
78040 MB DIS	50.7		43.3	85.4	57.8	114.0
		Mean		89.3		120.2
		RPD		8.8		10.4

Lettuce			Malathion		Malaoxon	
Lab Sample No.	Spike Level (ug/L)		Result (ug/L)	% Recovery	Result (ug/L)	% Recovery
920619 MA DIS	5.2		5.0	96.2	6.64	127.7
920619 MA DIS	5.5		4.94	89.8	6.65	120.9
		Mean		93.0		124.3
		RPD		6.8		5.5

Blanks - Dislodgable

			Malathion		Malaoxon	
Lab Sample No.	Spike Level (ug/L)	Matrix	Result (ug/L)	% Recovery	Result (ug/L)	% Recovery
BLANK M	0	Solvent	nd		nd	
BLANK M	0	Tomato	nd		nd	
BLANK M	0	Lettuce	nd		nd	

Study 119 Main Study QC Results - Tomato & Lettuce Internal Duplicate Matrix Spikes #2

Study: 119
Analyte: Malathion and Malaoxon
MDL: Malathion - 5ug/kg & Malaoxon - 10ug/kg
Reporting Units: ug/kg
Sample Extraction Set Reference:
78317-78336 Internal

Sample Date: 6/17/92
Extraction Set Date: 6/19/92
Report Date: 7/23/92
Sample Type: Tomato & Lettuce
Lab: APPL

Tomato			Malathion		Malaoxon	
Lab Sample No.	Spike Level (ug/kg)		Result (ug/kg)	% Recovery	Result (ug/kg)	% Recovery
78040 MA INT	51.16		26.6	52.0	24.3	47.5
78040 MB INT	49.0		18.5	37.8	21	42.9
		Mean		44.9		45.2
		RPD		31.7		10.3

Lettuce			Malathion		Malaoxon	
Lab Sample No.	Spike Level (ug/kg)		Result (ug/kg)	% Recovery	Result (ug/kg)	% Recovery
920619 MA INT	5155		3156	61.2	4067	78.9
920619 MA INT	5495		3905	71.1	4866	88.6
		Mean		66.1		83.7
		RPD		14.9		11.5

Blanks - Internal

Lab Sample No.	Spike Level	Matrix	Malathion Result	Malathion % Recovery	Malaoxon Result	Malaoxon % Recovery
BLANK M	0ug/L	Solvent	nd		nd	
BLANK M	0ug/kg	Tomato	nd		nd	
BLANK M	0ug/kg	Lettuce	nd		nd	

Study 119 Main Study QC Results - Water Duplicate Matrix Spikes #3

Study: 119
Analyte: Malathion and Malaoxon
MDL: Malathion - 0.5ug/L & Malaoxon - 1.0ug/L
Sample Extraction Set Reference:
78148-78156

Sample Date: 6/15,16/92
Extraction Set Date: 6/19/92
Report Date: 7/23/92
Sample Type: DI Water
Lab: APPL

Lab Sample No.	Spike Level (ug/L)		Malathion Result (ug/L)	Malathion % Recovery	Malaoxon Result (ug/L)	Malaoxon % Recovery
920619W-A	5		3.88	77.6	4.84	96.8
920619W-B	5		3.78	75.6	4.61	92.2
		Mean		76.6		94.5
		RPD		2.6		4.9

Study 119 QC Results - Blanks

Lab Sample No.	Spike Level (ug/L)	Analyte	Results in ug/L Malathion	Results in ug/L Malaoxon
BLANK	0	Solvent	ND	ND
BLANK	0	DI Water	ND	ND

Study 119 Main Study QC Results - Deposition Jar Duplicate Matrix Spikes #4

Study: 119
Analyte: Malathion and Malaoxon
MDL: Malathion - 0.5ug/jar & Malaoxon - 1.0ug/jar
Sample Extraction Set Reference:
78175-78181

Sample Date: 6/15/92
Extraction Set Date: 6/22/92
Report Date: 7/25/92
Sample Type: half pint mason jar
Lab: APPL

Lab Sample No.	Spike Level (ug/jar)		Malathion Result (ug/jar)	Malathion % Recovery	Malaoxon Result (ug/jar)	Malaoxon % Recovery
920622M-A	5		4.69	93.8	4.3	86
920622M-B	5		4.13	82.6	4.48	89.6
		Mean		88.2		87.8
		RPD		12.7		4.1

Study 119 QC Results - Blanks

Lab Sample No.	Spike Level (ug/jar)	Analyte	Results in ug/jar Malathion	Results in ug/jar Malaoxon
BLANK	0	Solvent	ND	ND

Study 119 Main Study QC Results - Water Duplicate Matrix Spikes #5

Study: 119
Analyte: Malathion and Malaoxon
MDL: Malathion - 0.5ug/L & Malaoxon - 1.0ug/L
Sample Extraction Set Reference:
78265-78268
78337-78340

Sample Date: 6/16/92
Extraction Set Date: 6/22/92
Report Date: 7/23/92
Sample Type: DI Water
Lab: APPL

Lab Sample No.	Spike Level (ug/L)		Malathion Result (ug/L)	Malathion % Recovery	Malaoxon Result (ug/L)	Malaoxon % Recovery
920622W-A	5		2.96	59.2	3.74	74.8
920622W-B	5		3.1	62	3.79	75.8
		Mean		60.6		75.3
		RPD		4.6		1.3

Study 119 QC Results - Blanks

Lab Sample No.	Spike Level (ug/L)	Analyte	Results in ug/L Malathion	Results in ug/L Malaoxon
BLANK	0	Solvent	ND	ND

Study 119 Main Study QC Results - Deposition Jar Duplicate Matrix Spikes #6

Study: 119
Analyte: Malathion and Malaoxon
MDL: Malathion - 0.5ug/jar & Malaoxon 1.0ug/jar
Sample Extraction Set Reference:
78182-78191

Sample Date: 6/15/92
Extraction Set Date: 6/23/92
Report Date: 7/25/92
Sample Type: half pint mason jar
Lab: APPL

Lab Sample No.	Spike Level (ug/jar)		Malathion Result (ug/jar)	Malathion % Recovery	Malaoxon Result (ug/jar)	Malaoxon % Recovery
920623J-A	5		4.03	80.6	4.4	88
920623J-B	5		3.97	79.4	4.82	96.4
		Mean		80.0		92.2
		RPD		1.5		9.1

Study 119 QC Results - Blanks

Lab Sample No.	Spike Level (ug/jar)	Analyte	Results in ug/jar Malathion	Malaoxon
BLANK	0	Solvent	ND	ND

Study 119 Main Study QC Results - Soil Duplicate Matrix Spikes #6

Study: 119
Analyte: Malathion and Malaoxon
MDL: Malathion - 0.5ug/kg & Malaoxon - 1.0ug/kg
Sample Extraction Set Reference:
78157-78165

Sample Date: 6/15/92
Extraction Set Date: 6/23/92
Report Date: 7/24/92
Sample Type: UCR soil
Lab: APPL

Lab Sample No.	Spike Level (ug/kg)		Malathion Result (ug/kg)	Malathion % Recovery	Malaoxon Result (ug/kg)	Malaoxon % Recovery
78042S-A	100		85.5	85.5	95.2	95.2
78042S-B	100		86.1	86.1	94.6	94.6
		Mean		85.8		94.9
		RPD		0.7		0.6
920623S-A	100		83.3	83.3	85.1	85.1
920623S-B	100		87.3	87.3	93.6	93.6
		Mean		85.3		89.4
		RPD		4.7		9.5

Study 119 QC Results - Blanks

Lab Sample No.	Spike Level (ug/kg)	Analyte	Results in ug/kg Malathion	Results in ug/kg Malaoxon
BLANK	0	Soil	ND	ND
BLANK	0	Solvent	ND	ND

Study 119 Main Study QC Results - Sand Duplicate Matrix Spikes #6

Study: 119
Analyte: Malathion and Malaoxon
MDL: Malathion - 0.5ug/kg & Malaoxon - 1.0ug/kg
Sample Extraction Set Reference:
78166-78174

Sample Date: 6/15/92
Extraction Set Date: 6/23/92
Report Date: 7/24,25/92
Sample Type: UCR soil
Lab: APPL

Lab Sample No.	Spike Level (ug/kg)		Malathion Result (ug/kg)	Malathion % Recovery	Malaoxon Result (ug/kg)	Malaoxon % Recovery
78043S-A	100		89.2	89.2	98.4	98.4
78043S-B	100		88.7	88.7	97.7	97.7
		Mean		89.0		98.1
		RPD		0.6		0.7

Study 119 QC Results - Blanks

Lab Sample No.	Spike Level (ug/kg)	Analyte	Results in ug/kg Malathion	Results in ug/kg Malaoxon
BLANK	0	Soil	ND	ND
BLANK	0	Solvent	ND	ND

Study 119 Main Study QC Results - Soil & Sand Duplicate Matrix Spikes #7

Study: 119	Sample Date: 6/15/92
Analyte: Malathion and Malaoxon	Extraction Set Date: 6/23/92
MDL: Malathion - 0.5ug/kg & Malaoxon - 1.0ug/kg	Report Date: 7/24/92
Sample Extraction Set Reference:	Sample Type: UCR soil
78269-78276	Lab: APPL

		Malathion		Malaoxon	
Lab Sample No.	Spike Level (ug/kg)	Result (ug/kg)	% Recovery	Result (ug/kg)	% Recovery
78043S-A	100	81.8	81.8	89.0	89
78043S-B	100	82.8	82.8	86.1	86.1
	Mean		82.3		87.6
	RPD		1.2		3.3

Study 119 QC Results - Blanks

Lab Sample No.	Spike Level (ug/kg)	Analyte	Results in ug/kg Malathion	Malaoxon
BLANK	0	Soil	ND	ND
BLANK	0	Solvent	ND	ND

Study 119 Main Study QC Results - Deposition Jar Duplicate Matrix Spikes #8

Study: 119
Analyte: Malathion and Malaoxon
MDL: Malathion - 0.5ug/jar & Malaoxon - 1.0ug/jar
Sample Extraction Set Reference:
78192-78197

Sample Date: 6/15/92
Extraction Set Date: 6/24/92
Report Date: 7/25/92
Sample Type: half pint mason jar
Lab: APPL

Lab Sample No.	Spike Level (ug/jar)		Malathion Result (ug/jar)	Malathion % Recovery	Malaoxon Result (ug/jar)	Malaoxon % Recovery
920624J-A	5		5.1	102	5.26	105.2
920624J-B	5		4.34	86.8	4.43	88.6
		Mean		94.4		96.9
		RPD		16.1		17.1

Study 119 QC Results - Blanks

Lab Sample No.	Spike Level (ug/jar)	Analyte	Results in ug/jar Malathion	Results in ug/jar Malaoxon
BLANK	0	Solvent	ND	ND

Study 119 Main Study QC Results - Soil & Sand Duplicate Matrix Spikes #9

Study: 119
Analyte: Malathion and Malaoxon
MDL: Malathion - 0.5ug/kg & Malaoxon - 1.0ug/kg
Sample Extraction Set Reference:
78346-78351

Sample Date: 6/17/92
Extraction Set Date: 6/26/92
Report Date: 7/23/92
Sample Type: UCR soil
Lab: APPL

Sand			Malathion		Malaoxon	
Lab Sample No.	Spike Level (ug/kg)		Result (ug/kg)	% Recovery	Result (ug/kg)	% Recovery
78043S-A	100		78.8	78.8	100.6	100.6
78043S-B	100		78.9	78.9	93.7	93.7
		Mean		78.9		97.2
		RPD		0.1		3.6

Soil			Malathion		Malaoxon	
Lab Sample No.	Spike Level (ug/kg)		Result (ug/kg)	% Recovery	Result (ug/kg)	% Recovery
78042S-A	100		76.9	76.9	72.9	72.9
78042S-B	100		75.4	75.4	91.5	91.5
		Mean		76.2		82.2
		RPD		0.1		7.1

Study 119 QC Results - Blanks

Lab Sample No.	Spike Level (ug/kg)	Analyte	Results in ug/kg Malathion	Malaoxon
BLANK	0	Soil	ND	ND
BLANK	0	Sand	ND	ND
BLANK	0	Solvent	ND	ND

Study 119 Main Study QC Results - Tomato & Lettuce Dislodgable Duplicate Matrix Spikes #10

Study: 119
Analyte: Malathion and Malaoxon
MDL: Malathion - 5ug/L & Malaoxon - 10ug/L
Reporting Units: ug/L
Sample Extraction Set Reference:
78620-78629 Dislodgable

Sample Date: 6/25/92
Extraction Set Date: 6/26/92
Report Date: 7/25/92
Sample Type: Tomato & Lettuce
Lab: APPL

Tomato			Malathion		Malaoxon	
Lab Sample No.	Spike Level (ug/L)		Result (ug/L)	% Recovery	Result (ug/L)	% Recovery
78040 MA DIS	0.05				0.06	120.0
78040 MA DIS	0.05		0.05	100.0		
78040 MA DIS	0.13				0.13	100.0
78040 MB DIS	0.13		0.11	84.6		
		Mean		92.3		110.0
		RPD		16.7		18.2

Lettuce			Malathion		Malaoxon	
Lab Sample No.	Spike Level (ug/L)		Result (ug/L)	% Recovery	Result (ug/L)	% Recovery
920626 MA DIS	10.8				10	92.6
920626 MA DIS	10.8		8.7	80.6		
920626 MA DIS	8.6				7.6	88.4
920626 MA DIS	8.6		6.5	75.6		
		Mean		78.1		90.5
		RPD		6.4		4.7

Blanks - Dislodgable

			Malathion		Malaoxon	
Lab Sample No.	Spike Level (ug/L)	Matrix	Result (ug/L)	% Recovery	Result (ug/L)	% Recovery
BLANK M	0	Solvent	nd		nd	
BLANK M	0	Tomato	nd		nd	
BLANK M	0	Lettuce	nd		nd	

Study 119 Main Study QC Results - Tomato & Lettuce Internal Duplicate Matrix Spikes #10

Study: 119
Analyte: Malathion and Malaoxon
MDL: Malathion - 5ug/L & Malaoxon - 10ug/L
Reporting Units: ug/L
Sample Extraction Set Reference:
78630-78639 Internal

Sample Date: 6/25/92
Extraction Set Date: 6/26/92
Report Date: 7/25/92
Sample Type: Tomato & Lettuce
Lab: APPL

Tomato		Malathion		Malaoxon	
Lab Sample No.	Spike Level (ug/L)	Result (ug/L)	% Recovery	Result (ug/L)	% Recovery
78040 MA INT	51.9			28.7	55.3
78040 MA INT	51.9	24.8	47.8		
78040 MA INT	132.7			73.7	55.5
78040 MB INT	132.7	64.8	48.8		
	Mean		48.3		55.4
	RPD		2.2		0.4

Lettuce		Malathion		Malaoxon	
Lab Sample No.	Spike Level (ug/L)	Result (ug/L)	% Recovery	Result (ug/L)	% Recovery
920626 MA INT	5208			5297	101.7
920626 MA INT	5208	4129	79.3		
920626 MA INT	8621			8792	102.0
920626 MA DIS	8621	6741	78.2		
	Mean		78.7		101.8
	RPD		1.4		0.3

Blanks - Internal

			Malathion		Malaoxon	
Lab Sample No.	Spike Level	Matrix	Result	% Recovery	Result	% Recovery
BLANK M	0ug/L	Solvent	nd		nd	
BLANK M	0ug/kg	Tomato	nd		nd	
BLANK M	0ug/kg	Lettuce	nd		nd	

Study 119 Main Study QC Results - Soil & Sand Duplicate Matrix Spikes #11

Study: 119
Analyte: Malathion and Malaoxon
MDL: Malathion - 0.5ug/kg & Malaoxon - 1.0ug/kg
Sample Extraction Set Reference:
78341-78345
78387-78394

Sample Date: 6/17/92
Extraction Set Date: 6/24/92
Report Date: 7/25/92
Sample Type: UCR soil
Lab: APPL

Lab Sample No.	Spike Level (ug/kg)		Malathion Result (ug/kg)	Malathion % Recovery	Malaoxon Result (ug/kg)	Malaoxon % Recovery
78042S-A	100		82.1	82.1	87.4	87.4
78042S-B	100		72.1	72.1	73.5	73.5
		Mean		77.1		80.5
		RPD		13.0		17.3

Study 119 QC Results - Blanks

Lab Sample No.	Spike Level (ug/kg)	Analyte	Results in ug/kg Malathion	Results in ug/kg Malaoxon
BLANK	0	Soil	ND	ND
BLANK	0	Solvent	ND	ND

Study 119 Main Study QC Results - Tomato & Lettuce Dislodgable Duplicate Matrix Spikes #12

Study: 119
Analyte: Malathion and Malaoxon
MDL: Malathion - 5ug/L & Malaoxon - 10ug/L
Reporting Units: ug/L
Sample Extraction Set Reference:
78249-78256 Dislodgable

Sample Date: 6/16/92
Extraction Set Date: 6/18/92
Report Date: 7/23/92
Sample Type: Tomato & Lettuce
Lab: APPL

Tomato			Malathion		Malaoxon	
Lab Sample No.	Spike Level (ug/L)		Result (ug/L)	% Recovery	Result (ug/L)	% Recovery
78040 MA DIS	44.1				38.9	88.2
78040 MA DIS	44.1		26.6	60.3		
78040 MA DIS	45.3				39.2	86.5
78040 MB DIS	45.3		25.9	57.2		
		Mean		58.7		87.4
		RPD		5.4		1.9

Lettuce			Malathion		Malaoxon	
Lab Sample No.	Spike Level (ug/L)		Result (ug/L)	% Recovery	Result (ug/L)	% Recovery
920618 MA DIS	5				5.4	108.0
920618 MA DIS	5		3.2	64.0		
920618 MA DIS	5				5.6	112.0
920618 MA DIS	5		3.5	70.0		
		Mean		67.0		110.0
		RPD		9.0		3.6

Blanks - Dislodgable

			Malathion		Malaoxon	
Lab Sample No.	Spike Level (ug/L)	Matrix	Result (ug/L)	% Recovery	Result (ug/L)	% Recovery
BLANK M	0	Solvent	nd		nd	
BLANK M	0	Tomato	nd		nd	
BLANK M	0	Lettuce	nd		nd	

Study 119 Main Study QC Results - Tomato & Lettuce Internal Duplicate Matrix Spikes #12

Study: 119
Analyte: Malathion and Malaoxon
MDL: Malathion - 5ug/kg & Malaoxon - 10ug/kg
Reporting Units: ug/kg
Sample Extraction Set Reference:
78257-78264 Internal

Sample Date: 6/16/92
Extraction Set Date: 6/18/92
Report Date: 7/23/92
Sample Type: Tomato & Lettuce
Lab: APPL

Tomato

Lab Sample No.	Spike Level (ug/kg)		Malathion Result (ug/kg)	Malathion % Recovery	Malaoxon Result (ug/kg)	Malaoxon % Recovery
78040 MA INT	62.3				49.5	79.5
78040 MA INT	62.3		36.9	59.2		
78040 MA INT	51.9				47.9	92.3
78040 MB INT	51.9		31.7	61.1		
		Mean		60.2		85.9
		RPD		3.1		15.0

Lettuce

Lab Sample No.	Spike Level (ug/kg)		Malathion Result (ug/kg)	Malathion % Recovery	Malaoxon Result (ug/kg)	Malaoxon % Recovery
920618 MA INT	3546				2800	79.0
920618 MA INT	3546		1974	55.7		
920618 MA INT	4630				3639	78.6
920618 MA INT	4630		2358	50.9		
		Mean		53.3		78.8
		RPD		8.9		0.5

Blanks - Internal

Lab Sample No.	Spike Level	Matrix	Malathion Result	Malathion % Recovery	Malaoxon Result	Malaoxon % Recovery
BLANK M	0ug/L	Solvent	nd		nd	
BLANK M	0ug/kg	Tomato	nd		nd	
BLANK M	0ug/kg	Lettuce	nd		nd	

Study 119 Main Study QC Results - Tank Mix Duplicate Matrix Spikes #13

Study: 119
Analyte: Malathion and Malaoxon
MDL: Malathion - 0.5ug/L & Malaoxon - 1.0ug/L
Sample Extraction Set Reference:
78399

Sample Date: 6/19/92
Extraction Set Date: 7/2/92
Report Date: 7/27/92
Sample Type: DI Water
Lab: APPL

Lab Sample No.	Spike Level (ug/L)		Malathion Result (ug/L)	Malathion % Recovery	Malaoxon Result (ug/L)	Malaoxon % Recovery
920702M-A	5		3.6	72	3.2	64
920702M-B	5		3.6	72	3.3	66
		Mean		72.0		65.0
		RPD		0.0		3.1

Study 119 QC Results - Blanks

Lab Sample No.	Spike Level (ug/L)	Analyte	Results in ug/L Malathion	Results in ug/L Malaoxon
BLANK	0	Water	ND	ND
BLANK	0	Solvent	ND	ND

Study 119 Main Study QC Results - Water Mix Duplicate Matrix Spikes #14

Study: 119
Analyte: Malathion and Malaoxon
MDL: Malathion - 0.5ug/L & Malaoxon - 1.0ug/L
Sample Extraction Set Reference:
78395-78398

Sample Date: 6/19/92
Extraction Set Date: 6/30/92
Report Date: 7/27/92
Sample Type: DI Water
Lab: APPL

Lab Sample No.	Spike Level (ug/L)		Malathion Result (ug/L)	Malathion % Recovery	Malaoxon Result (ug/L)	Malaoxon % Recovery
920626W-A	5		4.6	92	2.2	44
920626W-B	5		4.5	90	2.3	46
		Mean		91.0		45.0
		RPD		2.2		4.4

Study 119 QC Results - Blanks

Lab Sample No.	Spike Level (ug/L)	Analyte	Results in ug/L Malathion	Results in ug/L Malaoxon
BLANK	0	Water	ND	ND
BLANK	0	Solvent	ND	ND

Study 119 Main Study QC Results - Tomato & Lettuce Dislodgable Duplicate Matrix Spikes #15

Study: 119
Analyte: Malathion and Malaoxon
MDL: Malathion - 5ug/L & Malaoxon - 10ug/L
Reporting Units: ug/L
Sample Extraction Set Reference:
78371-78378 Dislodgable

Sample Date: 6/19/92
Extraction Set Date: 6/20/92
Report Date: 7/28/92
Sample Type: Tomato & Lettuce
Lab: APPL

Tomato			Malathion		Malaoxon	
Lab Sample No.	Spike Level (ug/L)		Result (ug/L)	% Recovery	Result (ug/L)	% Recovery
78040 MA DIS	67				76	113.4
78040 MA DIS	67		60	89.6		
78040 MA DIS	67				84	125.4
78040 MB DIS	67		65	97.0		
		Mean		93.3		119.4
		RPD		8.0		10.0

Lettuce			Malathion		Malaoxon	
Lab Sample No.	Spike Level (ug/L)		Result (ug/L)	% Recovery	Result (ug/L)	% Recovery
920618 MA DIS	3.6				3.9	108.3
920618 MA DIS	3.6		3.0	83.3		
920618 MA DIS	3.73				5.03	134.9
920618 MA DIS	3.73		3.74	100.3		
		Mean		91.8		121.6
		RPD		18.4		21.8

Blanks - Dislodgable

			Malathion		Malaoxon	
Lab Sample No.	Spike Level (ug/L)	Matrix	Result (ug/L)	% Recovery	Result (ug/L)	% Recovery
BLANK M	0	Solvent	nd		nd	
BLANK M	0	Tomato	nd		nd	
BLANK M	0	Lettuce	nd		nd	

Study 119 Main Study QC Results - Tomato & Lettuce Internal Duplicate Matrix Spikes #15

Study: 119
Analyte: Malathion and Malaoxon
MDL: Malathion - 5ug/kg & Malaoxon - 10ug/kg
Reporting Units: ug/kg
Sample Extraction Set Reference:
78379-78386 Internal

Sample Date: 6/19/92
Extraction Set Date: 6/20/92
Report Date: 7/28/92
Sample Type: Tomato & Lettuce
Lab: APPL

Tomato

Lab Sample No.	Spike Level (ug/kg)	Malathion Result (ug/kg)	Malathion % Recovery	Malaoxon Result (ug/kg)	Malaoxon % Recovery
78040 MA INT	66.9			44.5	66.5
78040 MA INT	66.9	38.1	57.0		
78040 MA INT	71.6			67.9	94.8
78040 MB INT	71.6	58.6	81.8		
	Mean		69.4		80.7
	RPD		35.9		35.1

Lettuce

Lab Sample No.	Spike Level (ug/kg)	Malathion Result (ug/kg)	Malathion % Recovery	Malaoxon Result (ug/kg)	Malaoxon % Recovery
920620 MA INT	1196			726	60.7
920620 MA INT	1196	600	50.2		
920620 MA INT	1342			1191	88.7
920620 MA INT	1342	1049	78.2		
	Mean		64.2		74.7
	RPD		43.6		37.5

Blanks - Internal

Lab Sample No.	Spike Level	Matrix	Malathion Result	Malathion % Recovery	Malaoxon Result	Malaoxon % Recovery
BLANK M	0ug/L	Solvent	nd		nd	
BLANK M	0ug/kg	Tomato	nd		nd	
BLANK M	0ug/kg	Lettuce	nd		nd	

Study 119 Main Study QC Results - Tomato Dislodgable Duplicate Matrix Spikes #16

Study: 119
Analyte: Malathion and Malaoxon
MDL: Malathion - 5ug/L & Malaoxon - 10ug/L
Reporting Units: ug/L
Sample Extraction Set Reference:
79045-79048 Dislodgable

Sample Date: 7/6/92
Extraction Set Date: 7/8/92
Report Date: 7/28/92
Sample Type: Tomato
Lab: APPL

Tomato			Malathion		Malaoxon	
Lab Sample No.	Spike Level (ug/L)		Result (ug/L)	% Recovery	Result (ug/L)	% Recovery
78040 MA DIS	5				5.1	102.0
78040 MA DIS	5		3.5	70.0		
78040 MA DIS	5				5.1	102.0
78040 MB DIS	5		3.6	72.0		
		Mean		71.0		102.0
		RPD		2.8		0.0

Blanks - Dislodgable

			Malathion		Malaoxon	
Lab Sample No.	Spike Level (ug/L)	Matrix	Result (ug/L)	% Recovery	Result (ug/L)	% Recovery
BLANK M	0	Solvent	nd		nd	
BLANK M	0	Tomato	nd		nd	

Study 119 Main Study QC Results - Tomato Internal Duplicate Matrix Spikes #16

Study: 119
Analyte: Malathion and Malaoxon
MDL: Malathion - 5ug/kg & Malaoxon - 10ug/kg
Reporting Units: ug/kg
Sample Extraction Set Reference:
79062-79065 Internal

Sample Date: 7/6/92
Extraction Set Date: 7/8/92
Report Date: 7/28/92
Sample Type: Tomato
Lab: APPL

Tomato

Lab Sample No.	Spike Level (ug/kg)		Malathion Result (ug/kg)	Malathion % Recovery	Malaoxon Result (ug/kg)	Malaoxon % Recovery
78040 MA INT	100				116	116.0
78040 MA INT	100		96	96.0		
78040 MA INT	100				68	68.0
78040 MB INT	100		54	54.0		
		Mean		75.0		92.0
		RPD		56.0		52.2

Blanks - Internal

Lab Sample No.	Spike Level	Matrix	Malathion Result	Malathion % Recovery	Malaoxon Result	Malaoxon % Recovery
BLANK M	0ug/L	Solvent	nd		nd	
BLANK M	0ug/kg	Tomato	nd		nd	
BLANK M	0ug/kg	Lettuce	nd		nd	

Study 119 Main Study QC Results - Soil & Sand Duplicate Matrix Spikes #17

Study: 119
Analyte: Malathion and Malaoxon
MDL: Malathion - 0.5ug/kg & Malaoxon - 1.0ug/kg
Sample Extraction Set Reference:
79053-79060

Sample Date: 6/17/92
Extraction Set Date: 6/24/92
Report Date: 7/25/92
Sample Type: UCR soil
Lab: APPL

Soil			Malathion		Malaoxon	
Lab Sample No.	Spike Level (ug/kg)		Result (ug/kg)	% Recovery	Result (ug/kg)	% Recovery
78042S-A	100				144.0	144
78042S-A	100		79.4	79.4		
78042S-B	100				143.0	143
78042S-B	100		79.2	79.2		
		Mean		79.3		143.5
		RPD		0.3		0.7

Sand			Malathion		Malaoxon	
Lab Sample No.	Spike Level (ug/kg)		Result (ug/kg)	% Recovery	Result (ug/kg)	% Recovery
78043S-A	100				132.2	132.2
78043S-A	100		73.2	73.2		
78043S-B	100				130.4	130.4
78043S-B	100		73.5	73.5		
		Mean		73.4		131.3
		RPD		0.4		1.4

Study 119 QC Results - Blanks

Lab Sample No.	Spike Level (ug/kg)	Analyte	Results in ug/kg Malathion	Malaoxon
BLANK	0	Solvent	ND	ND
BLANK	0	Soil	ND	ND
BLANK	0	Sand	ND	ND

Study 119 Main Study QC Results - Soil & Sand Duplicate Matrix Spikes #18

Study: 119
Analyte: Malathion and Malaoxon
MDL: Malathion - 0.5ug/kg & Malaoxon - 1.0ug/kg
Sample Extraction Set Reference:
78651-78660

Sample Date: 6/25/92
Extraction Set Date: 7/1/92
Report Date: 7/29/92
Sample Type: UCR soil
Lab: APPL

Soil			Malathion		Malaoxon	
Lab Sample No.	Spike Level (ug/kg)		Result (ug/kg)	% Recovery	Result (ug/kg)	% Recovery
78042S-A	100				129.8	129.8
78042S-A	100		95.5	95.5		
78042S-B	100				139.4	139.4
78042S-B	100		105.2	105.2		
		Mean		100.4		134.6
		RPD		9.7		7.1

Sand			Malathion		Malaoxon	
Lab Sample No.	Spike Level (ug/kg)		Result (ug/kg)	% Recovery	Result (ug/kg)	% Recovery
78043S-A	100				133.0	133
78043S-A	100		99.8	99.8		
78043S-B	100				127.1	127.1
78043S-B	100		101.2	101.2		
		Mean		100.5		130.1
		RPD		1.4		4.5

Study 119 QC Results - Blanks

Lab Sample No.	Spike Level (ug/kg)	Analyte	Results in ug/kg Malathion	Malaoxon
BLANK	0	Solvent	ND	ND
BLANK	0	Soil	ND	ND
BLANK	0	Sand	ND	ND

Study 119 Main Study QC Results - Water Mix Duplicate Matrix Spikes #19

Study: 119
Analyte: Malathion and Malaoxon
MDL: Malathion - 0.5ug/L & Malaoxon - 1.0ug/L
Sample Extraction Set Reference:
78646-78650

Sample Date: 6/25/92
Extraction Set Date: 7/2/92
Report Date: 7/29/92
Sample Type: DI Water
Lab: APPL

Lab Sample No.	Spike Level (ug/L)		Malathion Result (ug/L)	Malathion % Recovery	Malaoxon Result (ug/L)	Malaoxon % Recovery
920702W-A	5				3.1	62
920702W-A	5		4.2	84		
920702W-B	5				1.8	36
920702W-B	5		4	80		
		Mean		82.0		49.0
		RPD		4.9		53.1

Study 119 QC Results - Blanks

Lab Sample No.	Spike Level (ug/L)	Analyte	Results in ug/L Malathion	Results in ug/L Malaoxon
BLANK	0	Water	ND	ND

Study 119 Main Study QC Results - Deposition Jar Duplicate Matrix Spikes #20

Study: 119
Analyte: Malathion and Malaoxon
MDL: Malathion - 0.5ug/jar & Malaoxon - 1.0ug/jar
Sample Extraction Set Reference:
78661

Sample Date: 6/25/92
Extraction Set Date: 7/2/92
Report Date: 7/29/92
Sample Type: half pint mason jar
Lab: APPL

Lab Sample No.	Spike Level (ug/jar)		Malathion Result (ug/jar)	Malathion % Recovery	Malaoxon Result (ug/jar)	Malaoxon % Recovery
920702J-A	5		3.6	72	3.2	64
920702J-B	5		3.6	72	3.3	66
		Mean		72.0		65.0
		RPD		0.0		3.1

Study 119 QC Results - Blanks

Lab Sample No.	Spike Level (ug/jar)	Analyte	Results in ug/jar Malathion	Results in ug/jar Malaoxon
BLANK	0	Solvent	ND	ND

Study 119 Main Study QC Results - Water Mix Duplicate Matrix Spikes #21

Study: 119	Sample Date: 7/6/92
Analyte: Malathion and Malaoxon	Extraction Set Date: 7/10/92
MDL: Malathion - 0.5ug/L & Malaoxon - 1.0ug/L	Report Date: 7/29/92
Sample Extraction Set Reference:	Sample Type: DI Water
79049-79052	Lab: APPL

			Malathion		Malaoxon	
Lab Sample No.	Spike Level (ug/L)		Result (ug/L)	% Recovery	Result (ug/L)	% Recovery
920702W-A	5				5.3	106
920702W-A	5		4.2	84		
920702W-B	5				4.8	96
920702W-B	5		3.5	70		
		Mean		77.0		101.0
		RPD		18.2		9.9

Study 119 QC Results - Blanks

Lab Sample No.	Spike Level (ug/L)	Analyte	Results in ug/L Malathion	Malaoxon
BLANK	0	Water	ND	ND

Storage Stability Test - Water

Study 119 - Malathion Dissipation in DI Water

Study: 119 | Date of Report: 7/1/92
Analyte: Malathion | Sample Type: DI Water
MDL: 0.1 ug/kg | Lab: APPL

Lab Sample #	Day	Date	Results ug/L	Mean	SD	CV
Blank M 05/15/92	0	5/15/92	nd			
76586M	0	5/15/92	663			
76587M	0	5/15/92	650			
76588M	0	5/15/92	515	609	82.0	13.4
Blank M 05/19/92	4	5/19/92	nd			
76589M	4	5/19/92	750			
76590M	4	5/19/92	716			
76591M	4	5/19/92	675	714	37.6	5.3
Blank M 05/22/92	7	5/22/92	nd			
76592M	7	5/22/92	652			
76593M	7	5/22/92	653			
76594M	7	5/22/92	568	624	48.8	7.8
Blank M 05/26/92	11	5/26/92	nd			
76595M	11	5/26/92	695			
76596M	11	5/26/92	578			
76597M	11	5/26/92	552	608	76.2	12.5
Blank M 05/29/92	14	5/29/92	nd			
76598M	14	5/29/92	847			
76599M	14	5/29/92	817			
76600M	14	5/29/92	768	811	39.9	4.9

A mixture of Nulure bait plus 95% ai Malathion was spiked into DI water in a 16L container. The mixture was stirred and three 1Liter replicate samples were drawn off immediately and analyzed. The stirring and sampling procedure was followed on each of days 4, 7, 11, and 14. A blank was analyzed with each sampling interval.

119-DEG.XLS

Appendix D

Statistical Methods

Nonlinear Regression - BMDP Statistical Software Manual, Volume 1. 1990. p. 403

Dixon, W.J., M.B. Brown, L.Engelman, and R.I. Jennrich (Eds),

University of California Press, Berkeley, CA.

Example AR.3 Using weights and requesting functions of parameters

Data Set AR.3
Radioactivity in the blood of a baboon named Brunhilda (personal communication from Spires, as reported by Jennrich and Bright, 1976)

Data Set AR.3 shows radioactivity counts in the blood of a baboon sampled at specific times after a single injection containing radioactive sulphate. We want to fit the data to a two-compartment model (the sum of two exponentials):

$$f = p_1 e^{p_2 t} + p_3 e^{p_4 t}$$

Counts x 10^{-4}	Time
15.1117	2
11.3601	4
9.7652	6
9.0935	8
8.4820	10
7.6891	15
7.3342	20
7.0593	25
6.7041	30
6.4313	40
6.1554	50
5.9940	60
5.7698	70
5.6440	80
5.3195	90
5.0938	110
4.8717	130
4.5996	150
4.4968	160
4.3602	170
4.2668	180

Jennrich and Bright list the weights (not shown) used to adjust for Poisson variation in the counts. The quantity minimized is the weighted sum of squared residuals

$$\Sigma\, w_j (y_j - \hat{y}_j)^2$$

where the sum is over all cases read.

We decide not to enter Jennrich and Bright's computed weights as data, because we want AR to compute weights by the same formula Jennrich and Bright used, i.e., weight = 1/COUNT². To accomplish this in Input AR.3, we specify the WT formula in the TRANSFORM paragraph and include a WEIGHT statement in the REGRESS paragraph. (Note that we use the observed response to compute the weights. Example AR.5 shows how to use weights based on the expected response.)

To obtain a sum of two exponential terms, we specify NUMBER and PARAMETERS in the REGRESS paragraph. We arrive at INITIAL values for the parameters by the process described in Examples AR.1 and AR.2.

We also want to obtain estimates (and their standard errors) for two functions of the parameters: the sum of the starting counts P1 + P3 at time zero, and the ratio of the two rate parameters, P2/P4. We include an FPARM statement in the REGRESS paragraph to give the number of functions, and we specify the functions in an FPARM paragraph:

```
/ FPARM   G1 = P1 + P3.
          G2 = P2/P4.
```

(In pre-1988 versions of AR, G1 and G2 are the only allowable names of the functions; the 1988 and later versions allow you to choose names.) AR evaluates these functions at each iteration, estimates their standard deviations, and includes them in the correlation matrix of the parameters (see Landaw et al., 1982).

12